US009913574B2

(12) **United States Patent**
**Surti**

(10) **Patent No.: US 9,913,574 B2**
(45) **Date of Patent: Mar. 13, 2018**

(54) **ENDOSCOPE CAP WITH RAMP**

(75) Inventor: **Vihar C. Surti**, Winston-Salem, NC (US)

(73) Assignee: **Cook Medical Technologies LLC**, Bloomington, IN (US)

( * ) Notice: Subject to any disclaimer, the term of this patent is extended or adjusted under 35 U.S.C. 154(b) by 365 days.

(21) Appl. No.: **12/968,810**

(22) Filed: **Dec. 15, 2010**

(65) **Prior Publication Data**

US 2011/0152618 A1 Jun. 23, 2011

**Related U.S. Application Data**

(60) Provisional application No. 61/288,050, filed on Dec. 18, 2009, provisional application No. 61/288,259, filed on Dec. 18, 2009, provisional application No. 61/288,060, filed on Dec. 18, 2009.

(51) **Int. Cl.**

| | |
|---|---|
| ***A61B 1/00*** | (2006.01) |
| ***A61B 1/018*** | (2006.01) |
| ***A61B 1/012*** | (2006.01) |
| *A61M 25/00* | (2006.01) |

(52) **U.S. Cl.**

CPC ..... ***A61B 1/012*** (2013.01); ***A61B 1/0008*** (2013.01); ***A61B 1/0014*** (2013.01); ***A61B 1/00089*** (2013.01); ***A61B 1/00098*** (2013.01); ***A61B 1/00101*** (2013.01); ***A61B 1/00135*** (2013.01); ***A61B 1/00137*** (2013.01); ***A61B 1/018*** (2013.01); *A61M 25/0067* (2013.01)

(58) **Field of Classification Search**

CPC ..... A61B 1/0008; A61B 1/00098; A61B 1/00101; A61B 1/0014; A61B 1/018; A61B 1/2736; A61B 2017/003; A61B 2017/0034; A61B 2017/2905; A61B 2017/2908; A61B 1/00089; A61B 1/00137; A61M 25/0026; A61M 25/0032; A61M 25/0067; A61M 25/0071; A61M 25/003

USPC ..... 600/106, 107, 121, 125, 127, 129, 153, 600/585; 606/191; 604/103.4, 604/95.01–95.05

See application file for complete search history.

(56) **References Cited**

U.S. PATENT DOCUMENTS

| | | | | |
|---|---|---|---|---|
| 4,593,680 | A * | 6/1986 | Kubokawa | 600/107 |
| 4,632,110 | A * | 12/1986 | Sanagi | 606/207 |
| 5,571,093 | A * | 11/1996 | Cruz et al. | 604/270 |
| 6,352,503 | B1 * | 3/2002 | Matsui | A61B 1/018 600/106 |
| 6,461,321 | B1 * | 10/2002 | Quinn | 604/43 |
| 6,605,033 | B1 | 8/2003 | Matsuno | |
| 6,689,051 | B2 | 2/2004 | Nakada et al. | |

(Continued)

FOREIGN PATENT DOCUMENTS

| | | |
|---|---|---|
| DE | 20 2008 007 774 U1 | 9/2008 |
| EP | 1 284 120 A1 | 2/2003 |

(Continued)

*Primary Examiner* — Timothy J Neal
*Assistant Examiner* — Aaron B Fairchild
(74) *Attorney, Agent, or Firm* — Brinks Gilson & Lione

(57) **ABSTRACT**

An endoscope cap is provided for directing medical devices toward a selected target anatomy in a patient. The endoscope cap includes a ramp that may be used to deflect medical devices that have been advanced from a proximal portion of an endoscope to a distal portion thereof. The ramp may be integral with the endoscope cap, or alternatively, may be pivotally attached thereto.
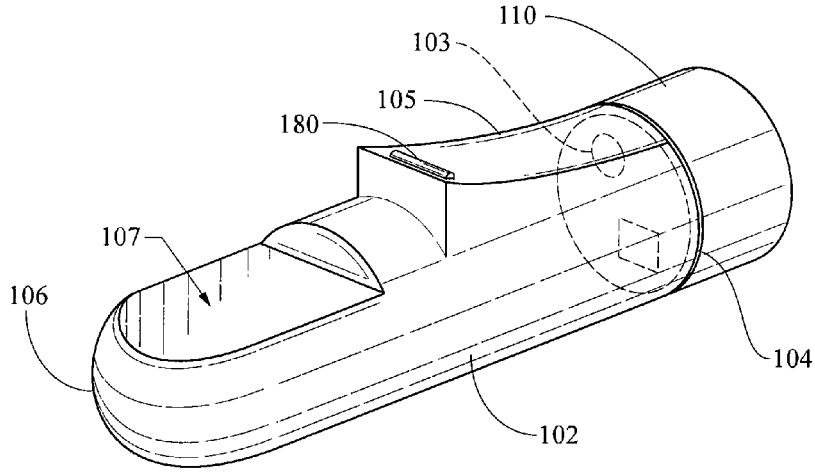
**17 Claims, 14 Drawing Sheets**