Oct. 12, 1971 W. MEYER 3,611,474

INVISIBLE HINGE

Filed Oct. 21, 1969 2 Sheets-Sheet 1

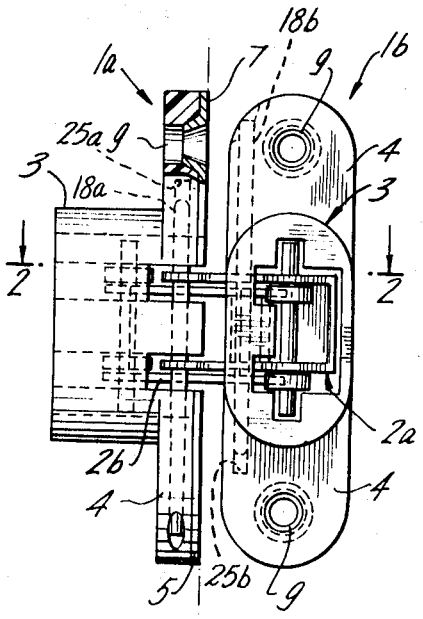

FIG. 1

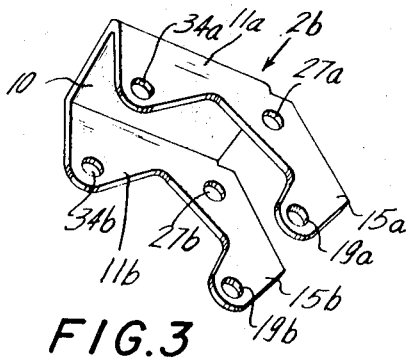

FIG. 3

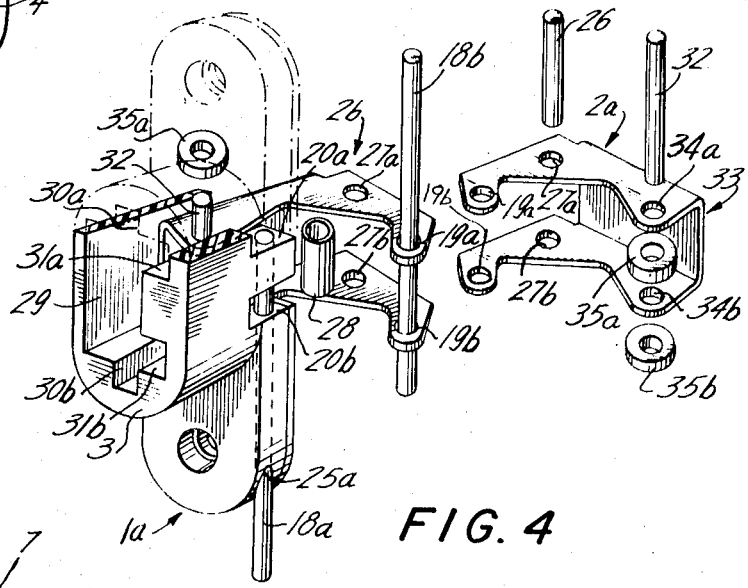

FIG. 4

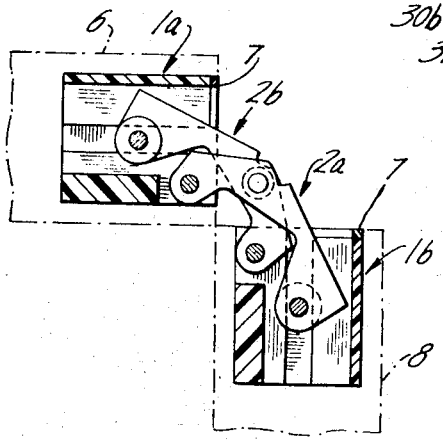

FIG. 2

INVENTOR
WALTER MEYER

BY

Brumbaugh, Graves, Donohue & Raymond
his ATTORNEYS