US009409274B2

(12) **United States Patent**
Nowak et al.

(10) **Patent No.: US 9,409,274 B2**
(45) **Date of Patent: Aug. 9, 2016**

(54) **TOOL FOR THE POLISHING OF OPTICAL SURFACES**

(71) Applicant: **Carl Zeiss Vision International GmbH**, Aalen (DE)

(72) Inventors: **Gerd Nowak**, Neresheim (DE); **Georg Michels**, Aalen (DE)

(73) Assignee: **Carl Zeiss Vision International GmbH**, Aalen (DE)

(*) Notice: Subject to any disclaimer, the term of this patent is extended or adjusted under 35 U.S.C. 154(b) by 0 days.

(21) Appl. No.: **14/516,428**

(22) Filed: **Oct. 16, 2014**

(65) **Prior Publication Data**

US 2015/0105002 A1 Apr. 16, 2015

(30) **Foreign Application Priority Data**

Oct. 16, 2013 (DE) 10 2013 220 973

(51) **Int. Cl.**
B24B 13/00 (2006.01)
B24B 13/01 (2006.01)

(52) **U.S. Cl.**
CPC ***B24B 13/01*** (2013.01)

(58) **Field of Classification Search**
CPC B24B 13/01; B24B 13/005; B24B 13/02; B24B 13/002
USPC 451/42
See application file for complete search history.

(56) **References Cited**

U.S. PATENT DOCUMENTS

1,651,181 A * 11/1927 Bugbee B24B 13/01 264/261
RE25,620 E * 7/1964 Sarofeen C09K 3/1463 451/42
3,144,737 A * 8/1964 Faas B24B 13/01 451/42
3,262,233 A * 7/1966 Schrier B24B 13/00 351/159.74
4,530,139 A * 7/1985 Miller H03H 3/04 29/25.35
4,733,502 A * 3/1988 Braun B24B 13/00 451/42
5,000,761 A * 3/1991 Mayton B24B 13/01 106/3
5,095,660 A * 3/1992 Dillon B24B 13/01 451/163
5,384,988 A * 1/1995 Hernandez B24D 9/085 451/42
5,527,368 A * 6/1996 Supkis B24B 13/02 51/295
6,089,963 A * 7/2000 Wiand B24B 13/02 451/390
6,926,597 B2 * 8/2005 Sangster B24D 11/00 451/42
7,033,261 B2 4/2006 Huguet
7,278,908 B2 10/2007 Urban et al.
8,246,424 B2 8/2012 Philipps et al.
2004/0043710 A1 * 3/2004 Miyazawa B24B 13/01 451/42
2004/0224619 A1 * 11/2004 Granziera B24B 13/02 451/277
2008/0305723 A1 * 12/2008 Philipps B24B 13/02 451/158
2010/0151772 A1 * 6/2010 Schneider B24B 13/01 451/42
2010/0159808 A1 * 6/2010 Shimodaira B24B 1/00 451/36
2010/0190415 A1 * 7/2010 Schneider B24B 13/06 451/42
2011/0104998 A1 * 5/2011 Valencia Merizalde B24B 13/02 451/526
2011/0124272 A1 * 5/2011 Felten B24B 13/0057 451/42
2011/0275295 A1 * 11/2011 Nowak B24B 13/00 451/540
2013/0130599 A1 * 5/2013 Miyazaki B24D 3/28 451/59

* cited by examiner

Primary Examiner — George Nguyen
(74) *Attorney, Agent, or Firm* — Walter Ottesen, P.A.

(57) **ABSTRACT**

A tool for the polishing of an optical surface has a base which has an active surface facing the optical surface. An intermediate layer is arranged on the active surface of the base. A polishing agent carrier is arranged on the elastic intermediate layer. The elastic intermediate layer projects radially beyond the active surface of the base and the polishing agent carrier projects radially beyond the elastic intermediate layer.
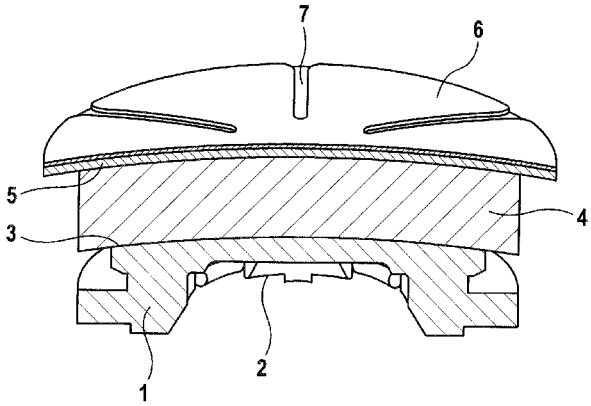
27 Claims, 2 Drawing Sheets