US009408974B2

(12) **United States Patent**
Pommereau et al.

(10) **Patent No.: US 9,408,974 B2**
(45) **Date of Patent: Aug. 9, 2016**

(54) **BUNG FOR DRUG CONTAINING CARTRIDGES IN DRUG DELIVERY DEVICES**

(75) Inventors: **Christian Pommereau**, Frankfurt am Main (DE); **Anke Liewald**, Frankfurt am Main (DE)

(73) Assignee: **Sanofi-Aventis Deutschland GmbH**, Frankfurt am Main (DE)

(*) Notice: Subject to any disclaimer, the term of this patent is extended or adjusted under 35 U.S.C. 154(b) by 0 days.

(21) Appl. No.: **13/321,492**

(22) PCT Filed: **May 20, 2010**

(86) PCT No.: **PCT/EP2010/056977**
§ 371 (c)(1),
(2), (4) Date: **Feb. 23, 2012**

(87) PCT Pub. No.: **WO2010/133675**
PCT Pub. Date: **Nov. 25, 2010**

(65) **Prior Publication Data**

US 2012/0143147 A1 Jun. 7, 2012

(30) **Foreign Application Priority Data**

May 20, 2009 (EP) 09006821

(51) **Int. Cl.**
A61M 5/315 (2006.01)

(52) **U.S. Cl.**
CPC ***A61M 5/31511*** (2013.01); *A61M 5/31525* (2013.01); *A61M 5/31573* (2013.01)

(58) **Field of Classification Search**
CPC A61M 5/31511; A61M 5/31525; A61M 5/31573
USPC 604/218, 403, 220, 225–226, 229, 604/236–238
See application file for complete search history.

(56) **References Cited**

U.S. PATENT DOCUMENTS

2,607,342	A	8/1952	Abel	
4,501,192	A *	2/1985	Knodel	92/248
2003/0233075	A1	12/2003	Huegli	

(Continued)

FOREIGN PATENT DOCUMENTS

DE	10226643	A1	1/2004
EP	0743072	A2	11/1996

(Continued)

OTHER PUBLICATIONS

European Patent Application Examination Report issued in European Patent Application No. 10723072.4 dated Feb. 3, 2016.

Primary Examiner — Rebecca E Eisenberg
(74) *Attorney, Agent, or Firm* — McDonnell Boehnen Hulbert & Berghoff LLP

(57) **ABSTRACT**

The present invention relates to a bung (**20**) for drug containing cartridges (**10**) for use in drug delivery devices wherein the bung (**20**) has a distal end face (**22**), a proximal end face (**24**) and a lateral area (**26**), wherein the bung (**20**) comprises at least two different materials, a first material (**30**) covering the whole lateral area (**26**) of the bung (**20**) and a second material (**32**) which is at least partly arranged inside the bung (**20**), wherein the first material (**30**) has a larger compressibility than the second material (**32**) and wherein the whole lateral area (**26**) has a flat surface. Furthermore, it relates to a cartridge (**10**) and to a drug delivery device comprising a bung (**20**) as claimed.
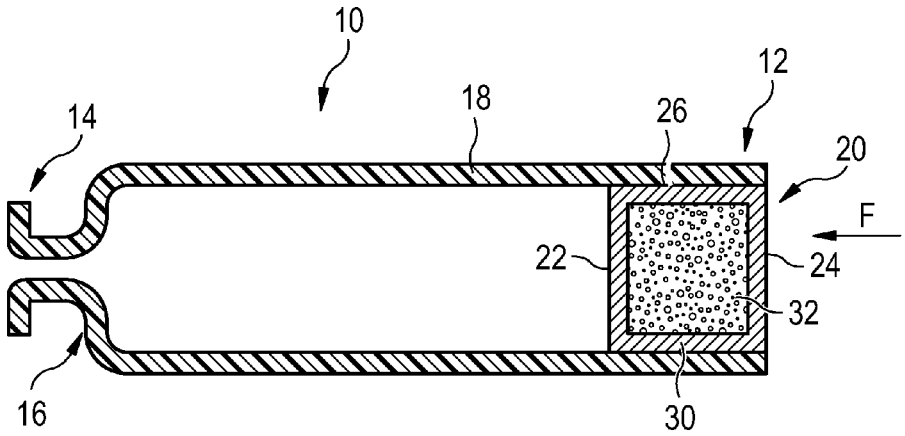
15 Claims, 1 Drawing Sheet