(No Model.)

M. CORSINI.

DISPLAY CASE OR CABINET.

No. 506,474. Patented Oct. 10, 1893.

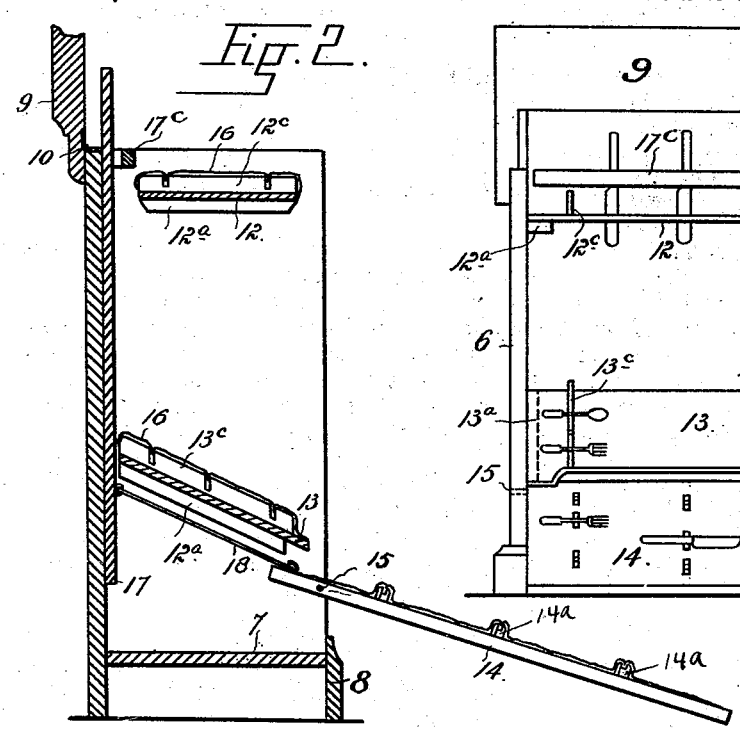

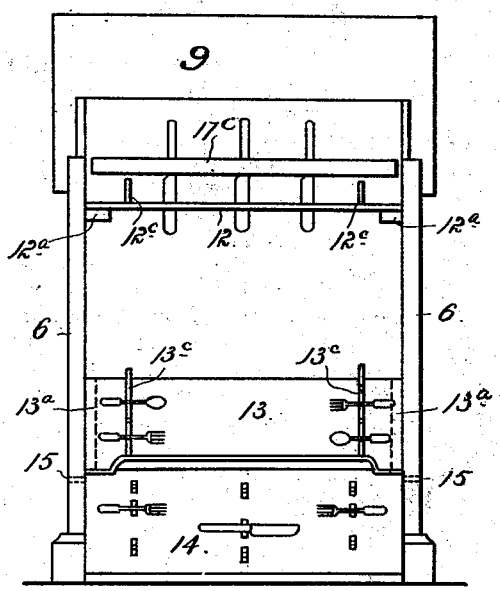

Fig. 1.

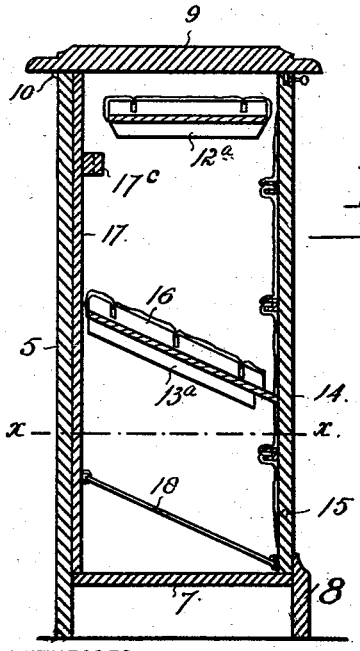

Fig. 3.

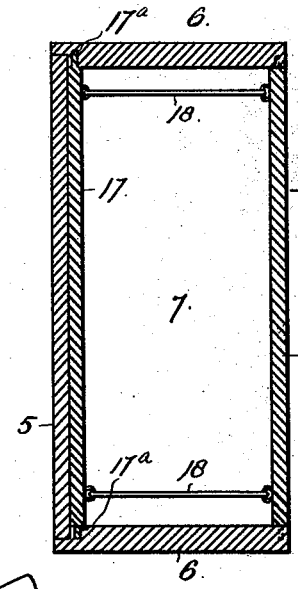

Fig. 4.

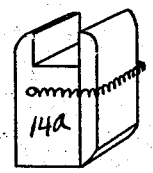

Fig. 5.

WITNESSES:

G. J. Dollandet.

Chas. E. Dawson

INVENTOR

M. Corsini

BY

A. J. Brien

ATTORNEY.