US010005574B2

(12) **United States Patent**
Margner

(10) **Patent No.: US 10,005,574 B2**
(45) **Date of Patent: Jun. 26, 2018**

(54) **METHOD AND DEVICE FOR HANDLING TEST TUBES IN A LABORATORY AUTOMATION SYSTEM**

(71) Applicant: **Roche Diagnostics Operations, Inc.**, Indianapolis, IN (US)

(72) Inventor: **Lech Margner**, Leonberg (DE)

(73) Assignee: **Roche Diagnostics Operations, Inc.**, Indianapolis, IN (US)

(*) Notice: Subject to any disclaimer, the term of this patent is extended or adjusted under 35 U.S.C. 154(b) by 0 days. days.

(21) Appl. No.: **15/016,935**

(22) Filed: **Feb. 5, 2016**

(65) **Prior Publication Data**

US 2016/0229565 A1 Aug. 11, 2016

(30) **Foreign Application Priority Data**

Feb. 11, 2015 (EP) 15154675

(51) **Int. Cl.**

B65B 7/28	(2006.01)
B65B 7/16	(2006.01)
G01N 35/02	(2006.01)
G01N 35/00	(2006.01)
G01N 35/04	(2006.01)

(52) **U.S. Cl.**

CPC ***B65B 7/28*** (2013.01); ***B65B 7/161*** (2013.01); ***G01N 35/0099*** (2013.01); ***G01N 35/026*** (2013.01); ***G01N 35/04*** (2013.01); *G01N 2035/0405* (2013.01)

(58) **Field of Classification Search**

CPC B01L 3/50825; G01N 2035/0405

See application file for complete search history.

(56) **References Cited**

U.S. PATENT DOCUMENTS

2002/0009391	A1	1/2002	Marquiss et al.	
2005/0026295	A1*	2/2005	Harding	B01L 9/06 436/43
2005/0260101	A1	11/2005	Nauck et al.	
2007/0248496	A1*	10/2007	Bondioli	B65B 7/161 422/400

FOREIGN PATENT DOCUMENTS

EP	1524525	A1	4/2005

* cited by examiner

Primary Examiner — P. Kathryn Wright

(74) *Attorney, Agent, or Firm* — Roche Diagnostics Operations, Inc.

(57) **ABSTRACT**

A method and a device for handling test tubes in a laboratory automation system are presented. During the handling, an open end of the test tube is covered by a residue-free removable, flat cover element forced against the open end of the test tube.
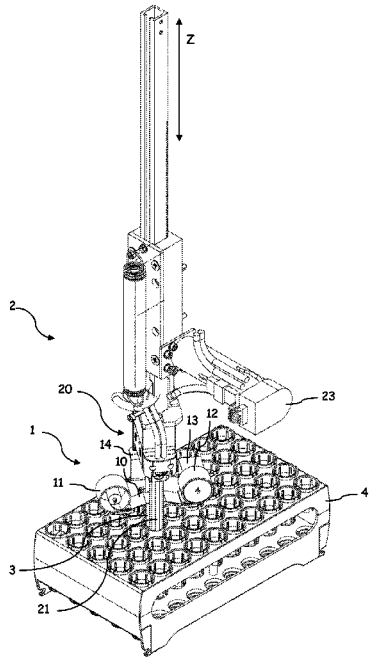
6 Claims, 3 Drawing Sheets