US005697973A

United States Patent [19]

Peyman et al.

[11] Patent Number: 5,697,973

[45] Date of Patent: Dec. 16, 1997

[54] INTRAOCULAR SILICONE LENS

[76] Inventors: **Gholam A. Peyman**, 123 Walnut, New Orleans, La. 70118; **Jeffery Koziol**, 1211 S. Arlington Heights, Arlington Heights, Ill. 60005

[21] Appl. No.: **573,256**

[22] Filed: **Dec. 15, 1995**

Related U.S. Application Data

[63] Continuation-in-part of Ser. No. 308,606, Sep. 19, 1994, abandoned.

[51] **Int. Cl.**[6] **A61F 2/16**

[52] **U.S. Cl.** **623/6**

[58] **Field of Search** 623/6

[56] **References Cited**

U.S. PATENT DOCUMENTS

Re. 33,039	8/1989	Arnott	623/6
4,124,905	11/1978	Clark	623/6
4,172,297	10/1979	Schlegel	623/6
4,206,518	6/1980	Jardon et al.	623/6
4,476,591	10/1984	Arnott	623/6
4,575,373	3/1986	Johnson	623/6
4,664,666	5/1987	Barrett	623/6
4,878,910	11/1989	Koziol et al.	623/6
5,133,750	7/1992	Momose et al.	623/6
5,171,320	12/1992	Nishi	623/6
5,201,763	4/1993	Brady et al.	623/6

FOREIGN PATENT DOCUMENTS

337390A2 10/1989 European Pat. Off. .

Primary Examiner—Mary Beth Jones
Attorney, Agent, or Firm—Wood, Herron & Evans, LLP

[57] **ABSTRACT**

An intraocular lens (**10**, **60**, **100**) adapted to be fixated to the periphery of either the iris or an opening in the capsular bag has an annular ring (**12**) including an upper flange (**14**), a lower flange (**16**), and an interconnecting inner wall (**18**). Disposed within the annular (**12**) is a substantially circular lens (**26**). Alternatively, the intraocular lens includes a substantially circular lens (**62**) with a substantially U-shaped channel (**64**) extending inwardly along the perimeter of circular lens (**62**).
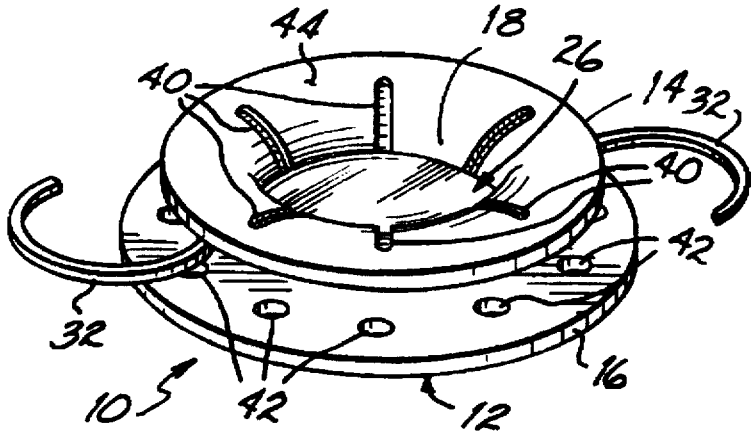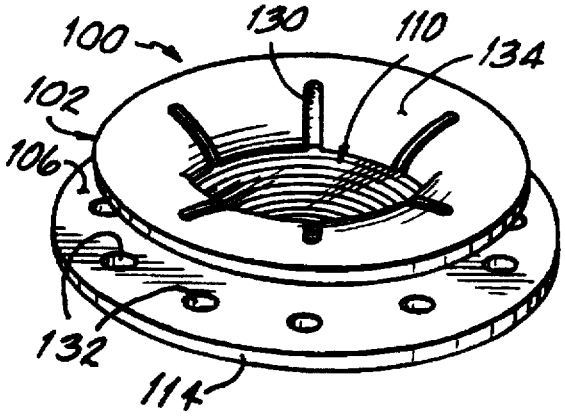
29 Claims, 3 Drawing Sheets