US006288473B1

(12) **United States Patent**
Mittas

(10) **Patent No.: US 6,288,473 B1**
(45) **Date of Patent: Sep. 11, 2001**

(54) **FREQUENCY MODULATION DRIVE FOR A PIEZOELECTRIC MOTOR**

(75) Inventor: **Anthony Mittas**, Albuquerque, NM (US)

(73) Assignee: **Sandia Corporation**, Albuquerque, NM (US)

(*) Notice: Subject to any disclaimer, the term of this patent is extended or adjusted under 35 U.S.C. 154(b) by 0 days.

(21) Appl. No.: **09/540,633**

(22) Filed: **Mar. 31, 2000**

(51) **Int. Cl.**[7] **H02N 2/14**
(52) **U.S. Cl.** **310/317**; 310/323.02; 310/323.03
(58) **Field of Search** 310/317, 323.02, 310/323.03

(56) **References Cited**

U.S. PATENT DOCUMENTS

4,275,363 * 6/1981 Mishiro et al. 310/316.01
4,901,034 * 2/1990 Frank-Peter 310/316.01
5,214,339 * 5/1993 Naito 310/316.01
5,661,359 * 8/1997 Katsuragawa 310/316.01
5,719,461 2/1998 Peclat et al. 310/323
5,777,860 * 7/1998 Halbert 310/316.01
5,834,876 11/1998 Luthier et al. 310/316
5,955,819 * 9/1999 Takano et al. 310/317

FOREIGN PATENT DOCUMENTS

63-56179 * 3/1988 (JP) 310/317
1-148080 * 6/1989 (JP) 310/317
8-214570 * 6/1989 (JP) 310/317
7-123754 * 5/1995 (JP) 310/317

* cited by examiner

Primary Examiner—Thomas M. Dougherty
(74) *Attorney, Agent, or Firm*—George H Libman

(57) **ABSTRACT**

A piezoelectric motor has peak performance at a specific frequency f_1 that may vary over a range of frequencies. A drive system is disclosed for operating such a motor at peak performance without feedback. The drive system consists of the motor and an ac source connected to power the motor, the ac source repeatedly generating a frequency over a range from $f_1-\Delta x$ to $f_1+\Delta y$.
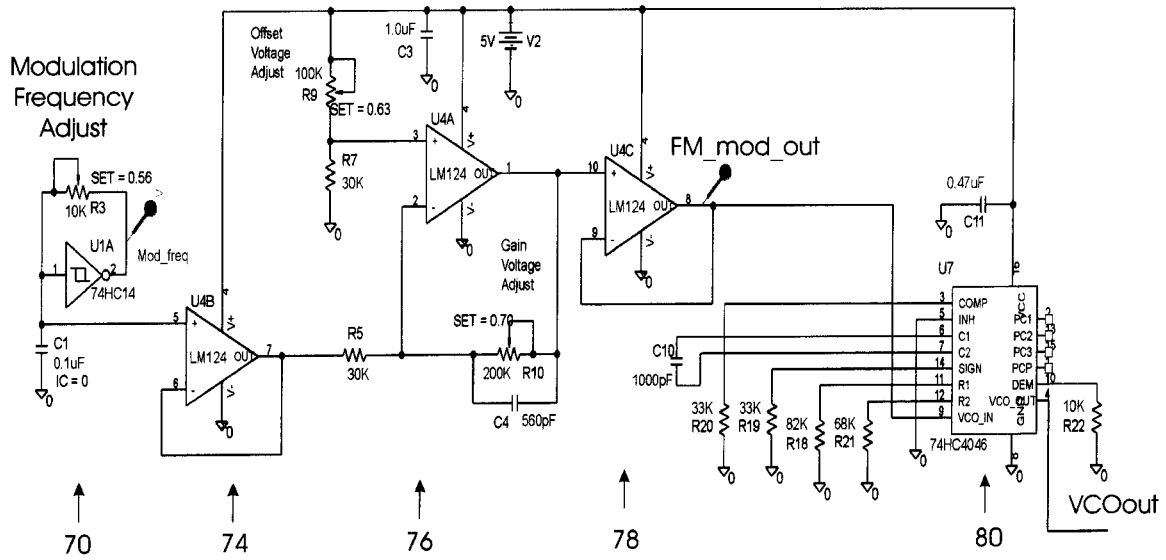
9 Claims, 5 Drawing Sheets