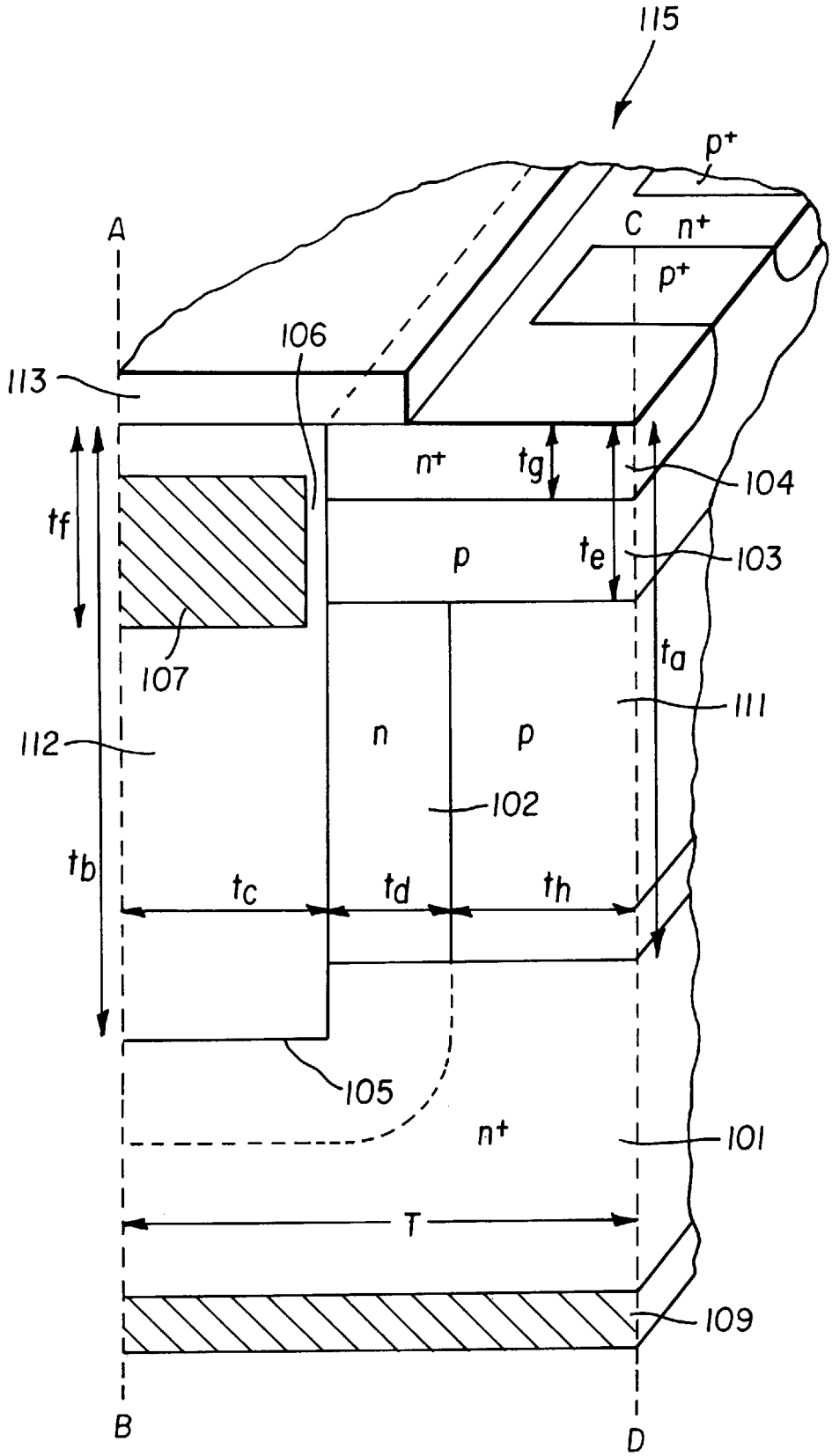
115
p+
A
C
n+
p+
106
113
n+
tg
104
tf
p
te
103
107
ta
111
112
n
p
102
tb
tc
td
th
105
n+
101
T
109
B
D

FIG. 1