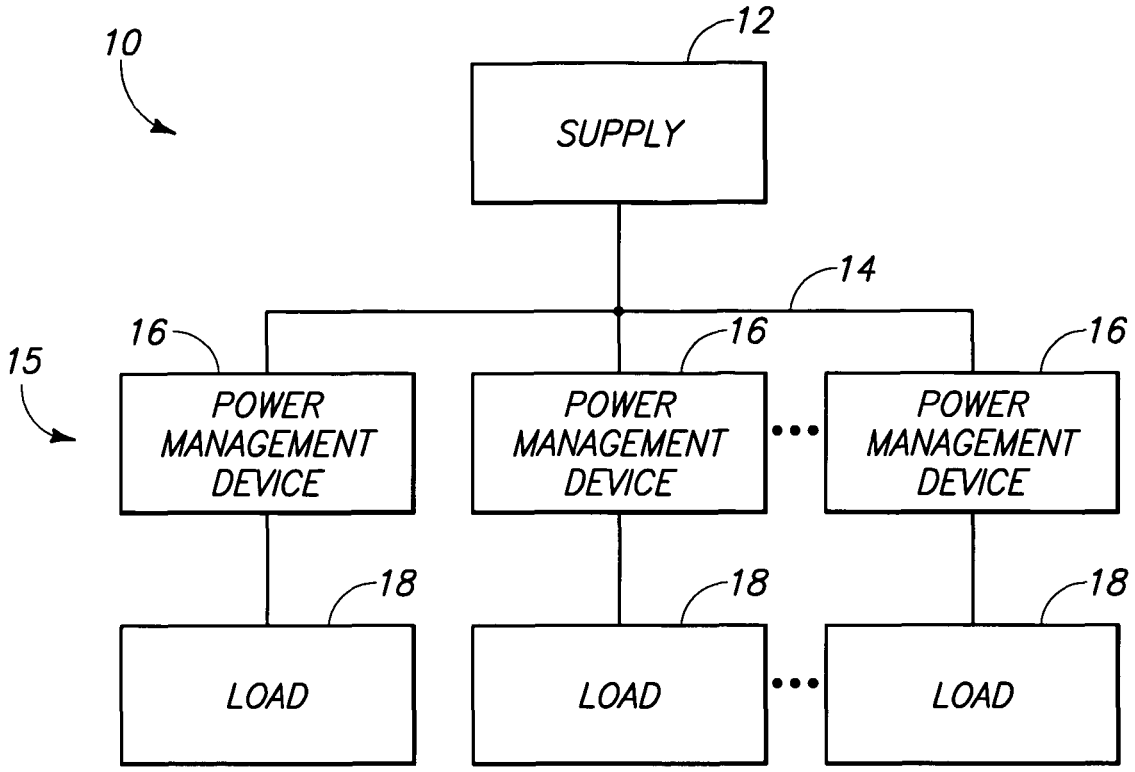
10
12
SUPPLY
14
15
16
16
16
POWER MANAGEMENT DEVICE
POWER MANAGEMENT DEVICE
POWER MANAGEMENT DEVICE
18
18
18
LOAD
LOAD
LOAD

Fig. 1