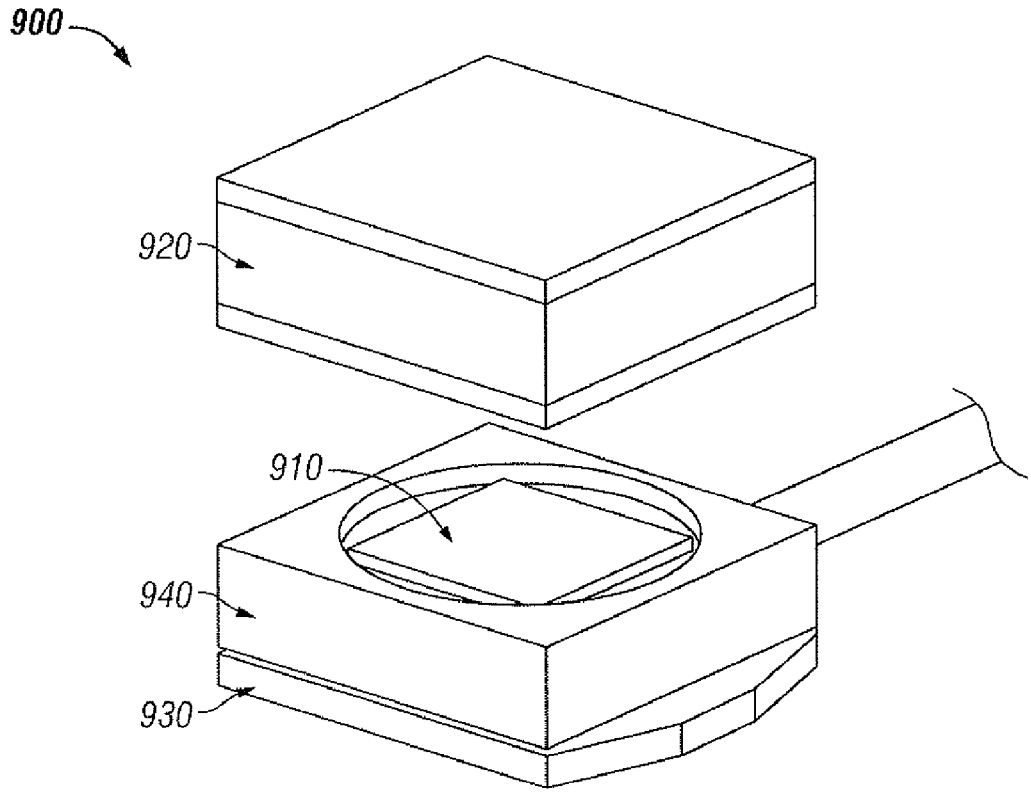
900
920
910
940
930

FIG. 11

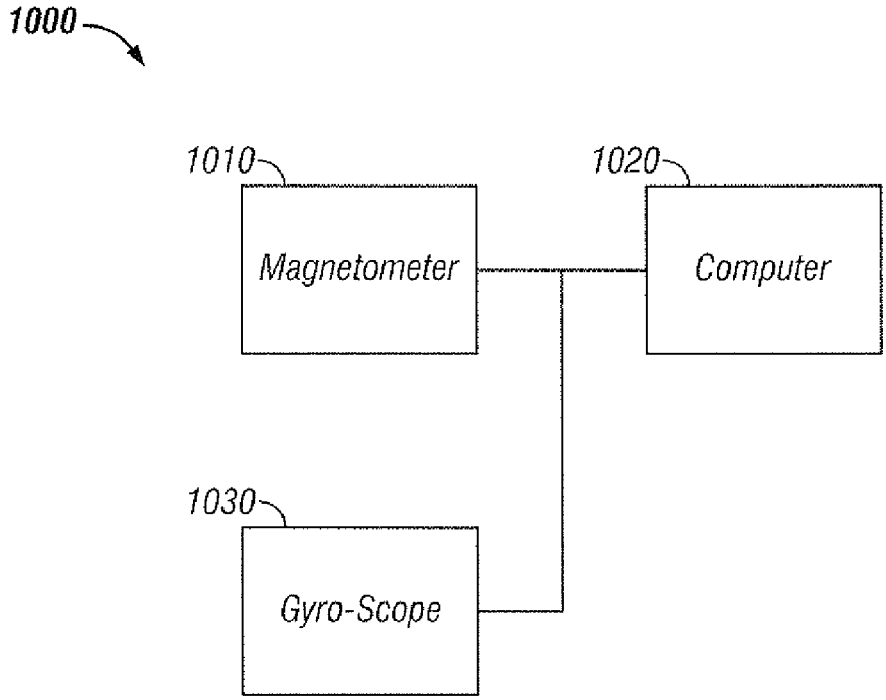
1000
1010
Magnetometer
1020
Computer
1030
Gyro-Scope

FIG. 12