US007872473B2

(12) **United States Patent**
Kitching et al.

(10) **Patent No.: US 7,872,473 B2**
(45) **Date of Patent: Jan. 18, 2011**

(54) **COMPACT ATOMIC MAGNETOMETER AND GYROSCOPE BASED ON A DIVERGING LASER BEAM**

(75) Inventors: **John Kitching**, Boulder, CO (US); **Elizabeth A. Donley**, Boulder, CO (US); **Eleanor Hodby**, Boulder, CO (US); **Andrei Shkel**, Irvine, CA (US); **Erik Jesper Eklund**, Costa Mesa, CA (US)

(73) Assignee: **The United States of America as represented by the Secretary of Commerce, the National Institute of Standards and Technology**, Washington, DC (US)

(*) Notice: Subject to any disclaimer, the term of this patent is extended or adjusted under 35 U.S.C. 154(b) by 50 days.

(21) Appl. No.: **12/186,690**

(22) Filed: **Aug. 6, 2008**

(65) **Prior Publication Data**

US 2009/0039881 A1 Feb. 12, 2009

Related U.S. Application Data

(60) Provisional application No. 60/954,555, filed on Aug. 7, 2007.

(51) **Int. Cl.**
G01V 3/00 (2006.01)

(52) **U.S. Cl.** **324/305**; 324/300; 324/301; 324/304; 324/319

(58) **Field of Classification Search** 324/300–322; 372/70, 29.01, 29.014, 50.21
See application file for complete search history.

(56) **References Cited**

U.S. PATENT DOCUMENTS

3,495,161 A * 2/1970 Bell 324/304
3,675,067 A * 7/1972 Brun 313/564
7,038,450 B2 5/2006 Romalis et al. 324/304
7,145,333 B2 12/2006 Romalis et al. 324/304
7,239,135 B2 7/2007 Abbink et al. 324/304
7,282,910 B1 * 10/2007 Kanegsberg 324/304
7,292,031 B2 * 11/2007 Abbink et al. 324/304
7,292,111 B2 11/2007 Abbink et al. 331/94.1
7,323,941 B1 * 1/2008 Happer et al. 331/3
7,359,059 B2 4/2008 Lust et al. 356/459
7,379,486 B2 * 5/2008 Lust et al. 372/70
7,652,473 B2 * 1/2010 Kawabata 324/304
7,719,268 B2 * 5/2010 Hersman et al. 324/304
7,723,985 B2 * 5/2010 Smith 324/301
7,737,689 B2 * 6/2010 Masuda 324/305

OTHER PUBLICATIONS

I.K. Kominis, T.W. Kornack, J.C. Allred, M.V. Romalis; A Subfemtotesla Multichannel Atomic Magnetometer; Nature Publishing Group, vol. 422, Apr. 10, 2003.

J.C. Allred, R.N. Lyman, T.W> Kornack, M.V. Romalis; High-Sensitivity Atomic Magnetometer Unaffected by Spin-Exchange Relaxation; The American Physical Society, vol. 89, No. 13, Sep. 23, 2002.

* cited by examiner

Primary Examiner—Melissa J Koval
Assistant Examiner—Dixomara Vargas
(74) *Attorney, Agent, or Firm*—Kermit Lopez; Luis Ortiz; Ortiz & Lopez, PLLC

(57) **ABSTRACT**

An atomic magnetometer that simultaneously achieves high sensitivity, simple fabrication and small size. This design is based on a diverging (or converging) beam of light that passes through an alkali atom vapor cell and that contains a distribution of beam propagation vectors. The existence of more than one propagation direction permits longitudinal optical pumping of atomic system and simultaneous detection of the transverse atomic polarization. The design could be implemented with a micro machined alkali vapor cell and light from a single semiconductor laser. A small modification to the cell contents and excitation geometry allows for use as a gyroscope.
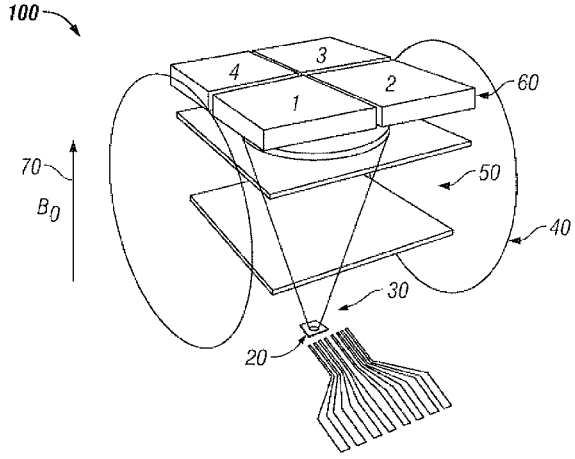
41 Claims, 10 Drawing Sheets