US008371173B1

(12) **United States Patent**
DiMambro et al.

(10) **Patent No.: US 8,371,173 B1**
(45) **Date of Patent: *Feb. 12, 2013**

(54) **ULTRASONIC PROBE DEPLOYMENT DEVICE FOR INCREASED WAVE TRANSMISSION AND RAPID AREA SCAN INSPECTIONS**

(75) Inventors: **Joseph DiMambro**, Placitas, NM (US); **Dennis P. Roach**, Albuquerque, NM (US); **Kirk A. Rackow**, Albuquerque, NM (US); **Ciji L. Nelson**, Albuquerque, NM (US); **Cameron J. Dasch**, Boomfield Hills, MI (US); **David G. Moore**, Albuquerque, NM (US)

(73) Assignee: **Sandia Corporation**, Albuquerque, NM (US)

(*) Notice: Subject to any disclaimer, the term of this patent is extended or adjusted under 35 U.S.C. 154(b) by 0 days.

This patent is subject to a terminal disclaimer.

(21) Appl. No.: **13/237,520**

(22) Filed: **Sep. 20, 2011**

Related U.S. Application Data

(63) Continuation of application No. 12/401,321, filed on Mar. 10, 2009, now Pat. No. 8,087,298.

(51) **Int. Cl.**
G01N 29/00 (2006.01)

(52) **U.S. Cl.** **73/629**; 73/644

(58) **Field of Classification Search** 73/629, 73/628, 641, 644

See application file for complete search history.

(56) **References Cited**

U.S. PATENT DOCUMENTS

4,183,249	A		1/1980	Anderson	
4,290,612	A	*	9/1981	Frosch et al.	277/345
4,472,975	A		9/1984	Beck et al.	
5,060,201	A		10/1991	Ishikawa et al.	
5,255,684	A	*	10/1993	Rello	600/463
5,343,109	A		8/1994	Mockl	
5,426,980	A	*	6/1995	Smith	73/644
5,450,851	A	*	9/1995	Hancock	600/462
5,469,744	A		11/1995	Patton et al.	
5,494,038	A		2/1996	Wang et al.	
5,729,508	A		3/1998	Baker et al.	
5,785,541	A	*	7/1998	Best et al.	439/164
5,814,731	A		9/1998	Alexander et al.	
6,117,084	A	*	9/2000	Green et al.	600/459
6,298,727	B1		10/2001	Fleming et al.	
6,481,290	B1		11/2002	MacInnis et al.	
6,578,424	B1	*	6/2003	Ziola et al.	73/632
6,733,457	B2		5/2004	Flesch et al.	
6,938,488	B2	*	9/2005	Diaz et al.	73/597
6,948,369	B2		9/2005	Fleming et al.	
7,284,434	B1		10/2007	Fleming	
7,694,569	B2		4/2010	McGrath et al.	
7,926,344	B1		4/2011	Hyde et al.	
8,166,823	B2	*	5/2012	Lam et al.	73/622
8,174,930	B2	*	5/2012	LaWhite et al.	367/90

OTHER PUBLICATIONS

Hsu, D. K. et al, "Detection and Imaging of Corrosion Around Wing Skin Fasteners Using the Dripless Bubbler Ultrasonic Scanner" SPIE vol. 3397. (1998), pp. 32-38.

Hsu. D.K. et al., "Nondestructive Evaluation of Repairs on Aircraft Composite Structures", SPIE vol. 4336, (2001), pp. 100-107.

* cited by examiner

Primary Examiner — J M Saint Surin
(74) *Attorney, Agent, or Firm* — Daniel J. Jenkins

(57) **ABSTRACT**

An ultrasonic probe deployment device in which an ultrasound-transmitting liquid forms the portion of the ultrasonic wave path in contact with the surface being inspected (i.e., the inspection surface). A seal constrains flow of the liquid, for example preventing the liquid from surging out and flooding the inspection surface. The seal is not rigid and conforms to variations in the shape and unevenness of the inspection surface, thus forming a seal (although possibly a leaky seal) around the liquid. The probe preferably is held in place to produce optimum ultrasonic focus on the area of interest. Use of encoders can facilitate the production of C-scan area maps of the material being inspected.
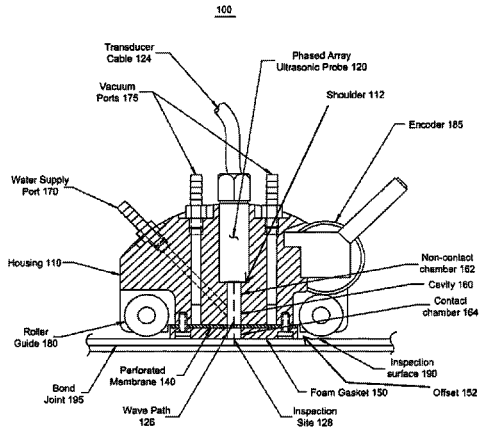
30 Claims, 6 Drawing Sheets