Aug. 1, 1939. C. A. SABBAH ET AL 2,168,173

TRANSFORMING MEANS

Filed June 5, 1937 3 Sheets-Sheet 1

Fig. 1.

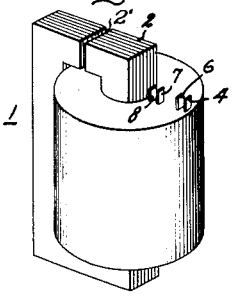

Fig. 2.

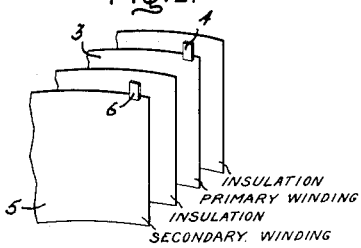

Fig. 3.

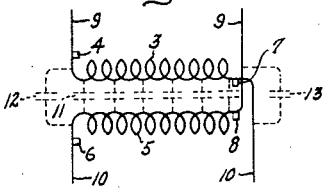

Fig. 4.

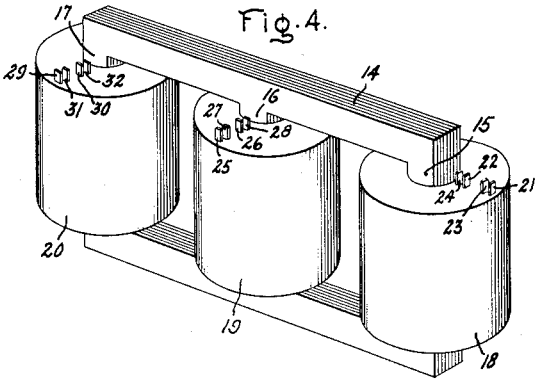

Fig. 5.

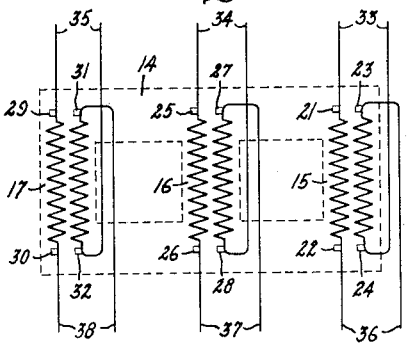

Inventors:
Camil A. Sabbah, Deceased
by William A. Dodge, Administrator
Lysle W. Morton,
by Harry E. Dunham
Attorney.