DRY MILK PRODUCT AND PROCESS OF MANUFACTURE

Original Filed July 19, 1957

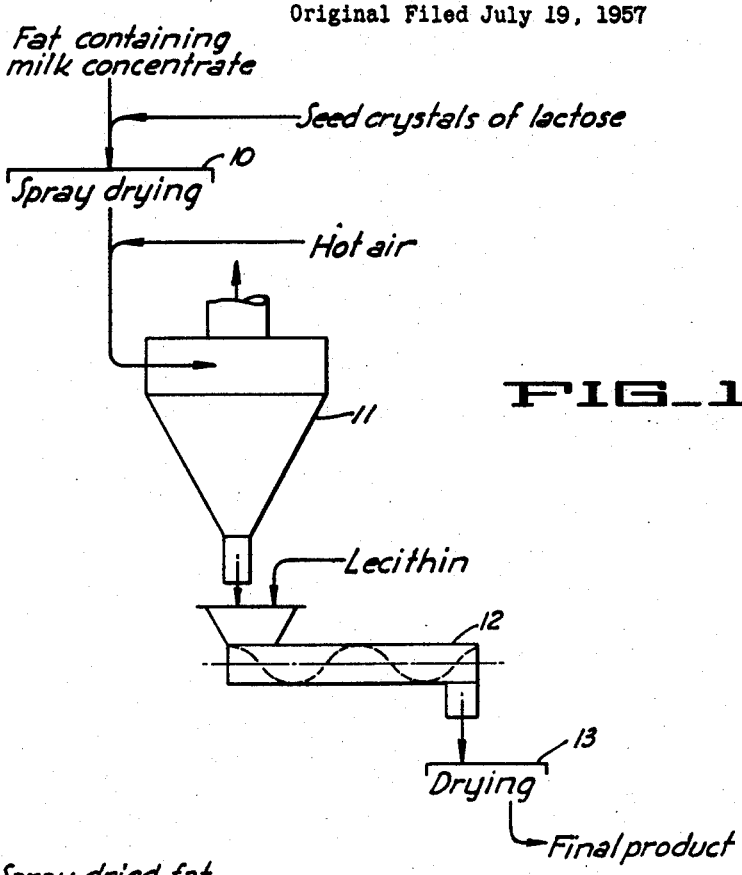

FIG_1_

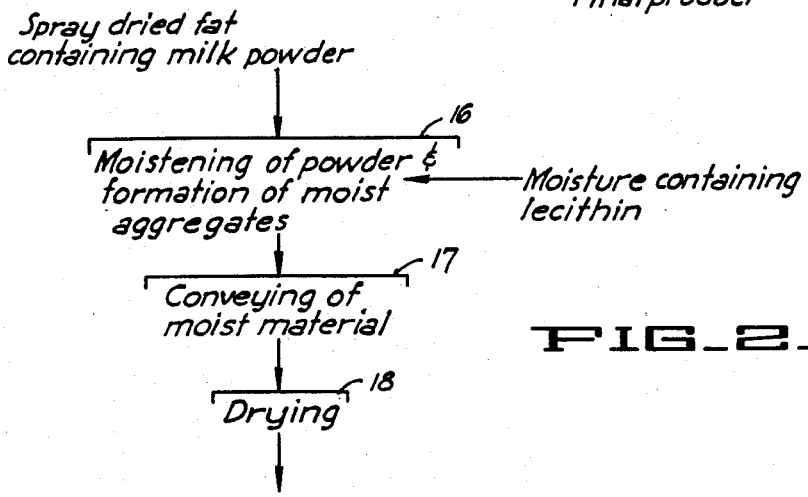

FIG_2_

INVENTORS
JOHN B. SHIELDS
LOUIS J. NAVA
BY CLAYTON A. KEMPF
Flehr and Irwin
ATTORNEYS