US00D752673S

(12) United States Design Patent

Petty et al.

(10) Patent No.: US D752,673 S
(45) Date of Patent: ** Mar. 29, 2016

(54) **CAMERA**

(71) Applicant: **Blackmagic Design Pty. Ltd.**, Port Melbourne, Victoria (AU)

(72) Inventors: **Grant Petty**, Melbourne (AU); **Simon Kidd**, Prahran (AU); **Stuart Elford**, Newport (AU); **Michael Cornish**, Black Rock (AU); **Chee Yau Lye**, Elwood (AU); **Ryan Harper**, Balwyn (AU); **Kristian Lam**, Point Cook (AU)

(73) Assignee: **Blackmagic Design Pty. Ltd.** (AU)

(**) Term: **14 Years**

(21) Appl. No.: **29/451,625**

(22) Filed: **Apr. 5, 2013**

(51) **LOC (10) Cl.** **16-01**

(52) **U.S. Cl.**
USPC **D16/202**

(58) **Field of Classification Search**
USPC D16/200, 202–206, 208, 209, 218, 219; 348/373–376; 396/175, 535, 539–541
CPC G03B 15/03; G03B 17/02; G03B 17/04; G03B 17/56; G03B 19/04; H04N 5/2251; H04N 5/2252; H04N 5/2253; H04N 5/2254; H04N 2101/00
See application file for complete search history.

(56) **References Cited**

U.S. PATENT DOCUMENTS

5,253,003 A * 10/1993 Fujii et al. 396/175
D520,544 S * 5/2006 Senda D16/202
D532,031 S * 11/2006 Hayashi D16/218
D631,496 S * 1/2011 Tainaka D16/202
D640,720 S * 6/2011 Yoshii et al. D16/202
D646,314 S * 10/2011 Nohara D16/202
D653,275 S * 1/2012 Sakai D16/202
D657,408 S * 4/2012 Tainaka D16/202
D669,930 S * 10/2012 Koyama et al. D16/219
8,638,390 B2 * 1/2014 Shinohara et al. 348/373
D716,359 S * 10/2014 Nohara D16/202

* cited by examiner

Primary Examiner — Susan E Krakower
Assistant Examiner — Ramzi Almatrahi
(74) *Attorney, Agent, or Firm* — Saidman DesignLaw Group, LLC

(57) **CLAIM**

The ornamental design for a camera, as shown and described.

DESCRIPTION

FIG. **1** is a front view of a camera showing our new design;
FIG. **2** is a top view thereof;
FIG. **3** is a rear view thereof;
FIG. **4** is a bottom view thereof;
FIG. **5** is a right side view thereof;
FIG. **6** is a left side view thereof;
FIG. **7** is a top, front perspective view thereof;
FIG. **8** is a top, rear perspective view thereof;
FIG. **9** is a bottom, front perspective view thereof; and,
FIG. **10** is a bottom, rear perspective view thereof.
The broken lines depict portions of a camera in which the design is embodied and form no part of the claimed design.
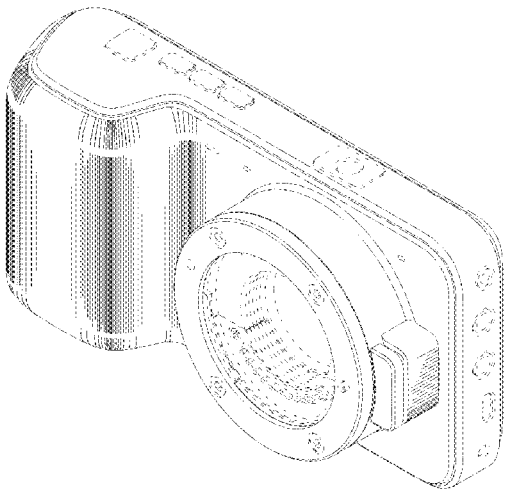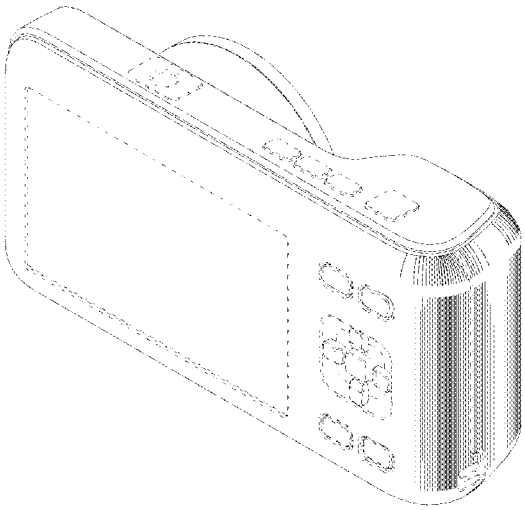
1 Claim, 10 Drawing Sheets