FIG. 1

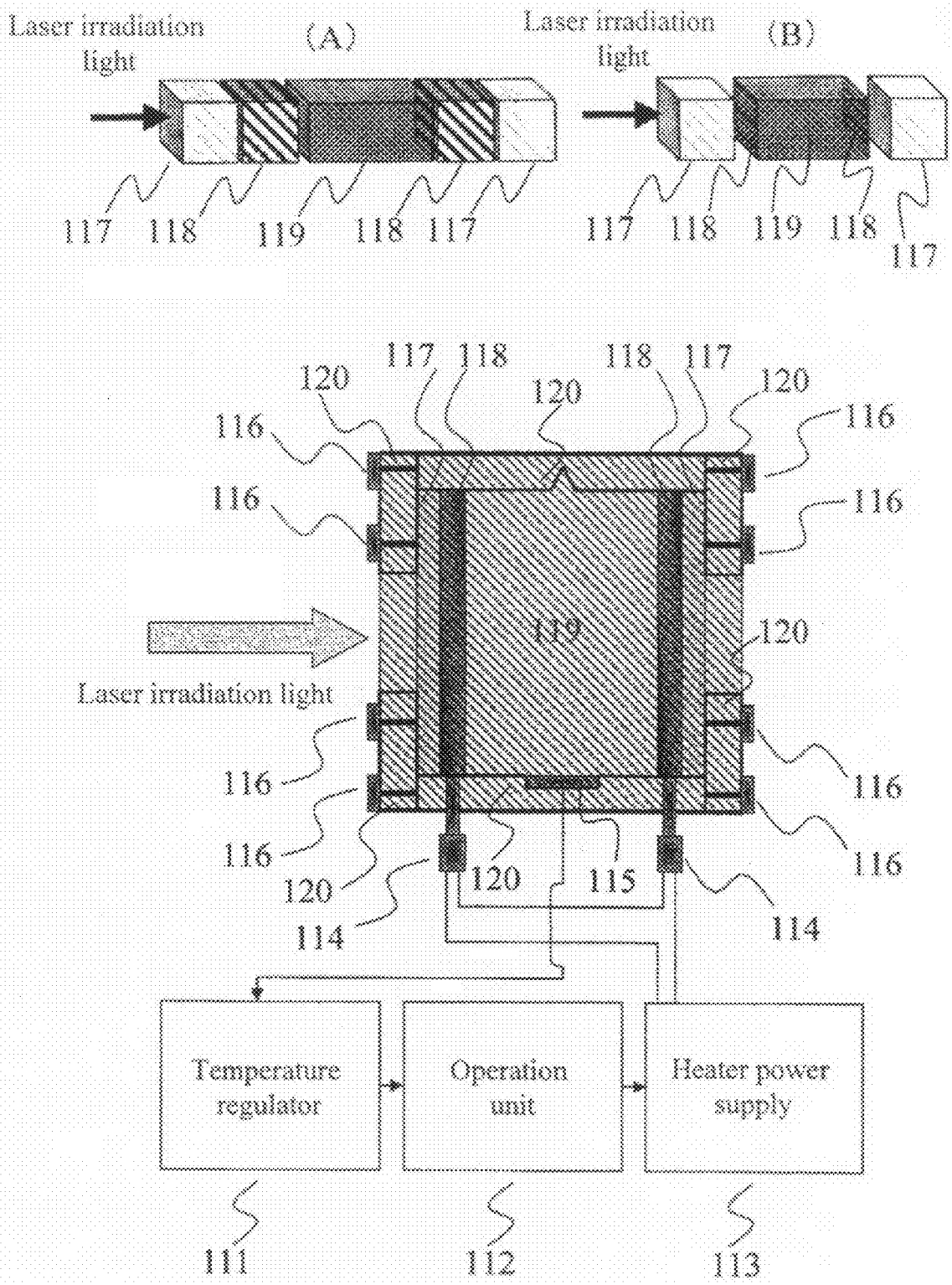
Laser irradiation light
(A)
117
118
119
118
117
Laser irradiation light
(B)
117
118
119
118
117
117
118
118
117
120
120
120
116
116
116
116
119
120
Laser irradiation light
116
116
116
116
120
120
115
114
114
Temperature regulator
Operation unit
Heater power supply
111
112
113