US005844773A

United States Patent [19]

Malhi

[11] **Patent Number: 5,844,773**

[45] **Date of Patent: Dec. 1, 1998**

[54] **PORTABLE COMPUTING DEVICE HAVING LIGHT SOURCE IN BASE**

[75] Inventor: **Satwinder Malhi**, Garland, Tex.

[73] Assignee: **Texas Instruments Incorporated**, Dallas, Tex.

[21] Appl. No.: **599,210**

[22] Filed: **Dec. 1, 1995**

[51] **Int. Cl.**[6] **G06F 1/16**; G01D 11/28

[52] **U.S. Cl.** **361/681**; 345/905; 362/26

[58] **Field of Search** 361/680–683, 361/686; 364/708.1; 345/50, 87, 905; 362/31, 26; 349/58, 65; G06F 1/16

[56] **References Cited**

U.S. PATENT DOCUMENTS

5,178,447	1/1993	Murase et al.	362/26
5,262,926	11/1993	Hall	361/681
5,510,806	4/1996	Busch	361/681
5,537,296	7/1996	Kimura et al.	362/31
5,548,478	8/1996	Kumar et al.	361/681

Primary Examiner—Lynn D. Feild
Attorney, Agent, or Firm—Bret J. Petersen; James Kesterson; Richard Donaldson

[57] **ABSTRACT**

An improved portable notebook computer having a base **(15)** connected to a display unit **(20)** that folds along a spine **(26)**. The display unit **(20)** is pivotally coupled to the base **(15)** for motion and houses a plurality of display components including a light source **(85)**, light guide **(80)** and LCD **(50)**. The display drive circuits **(115)**, light source **(85)**, power board **(165)** and related display components are relocated to the base **(15)** reducing the thickness and weight of the display unit **(20)**. PWB's **(115, 120, 125)** used to control LCD **(50)** display functions are maintained on the display case back **(70)** to take advantage of available space within the display unit **(20)**. A flexible circuit **(330)** extends from the base **(15)** to the display unit **(20)** to connect the display drive circuits **(115)** to the PCB's **(115, 120, 125)** for controlling LCD **(50)** display functions.
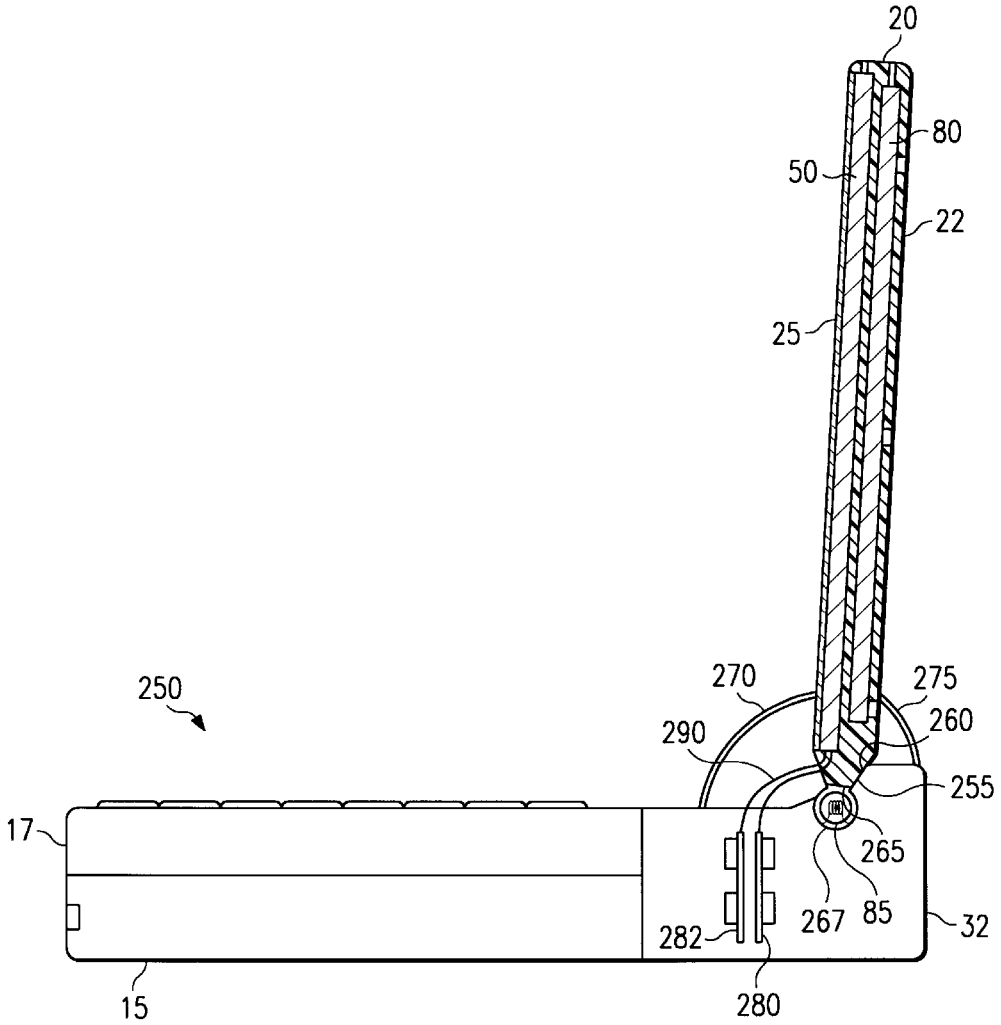
16 Claims, 4 Drawing Sheets