US006623673B1

(12) **United States Patent**
Becker et al.

(10) **Patent No.: US 6,623,673 B1**
(45) **Date of Patent: Sep. 23, 2003**

(54) **METHOD FOR THE METERED DISCHARGE OF A STRING OF A VISCOUS MEDIUM AND FEEDPUMP FOR DISCHARGING A STRING OF A VISCOUS MEDIUM**

(75) Inventors: **Manfred Becker**, Ober-Ramstadt (DE); **Bernd Gerner**, Wald-Michelbach (DE); **Hendrik Hovy**, Mühltal (DE); **Erwin Sowa**, Alsbach (DE); **Matthias Reck**, Ober-Ramstadt (DE)

(73) Assignee: **Datron-Electronic GmbH** (DE)

(*) Notice: Subject to any disclaimer, the term of this patent is extended or adjusted under 35 U.S.C. 154(b) by 135 days.

(21) Appl. No.: **09/654,619**

(22) Filed: **Sep. 5, 2000**

(30) **Foreign Application Priority Data**

Sep. 3, 1999 (DE) 199 42 219
Apr. 26, 2000 (DE) 100 20 295

(51) **Int. Cl.**[7] **B29C 47/00**
(52) **U.S. Cl.** **264/40.4**; 264/40.7
(58) **Field of Search** 264/40.4, 40.7, 264/176.1; 222/71; 425/145

(56) **References Cited**

U.S. PATENT DOCUMENTS

3,881,654 A * 5/1975 Larkin 239/127
4,043,294 A * 8/1977 Morine et al. 118/25
4,643,863 A * 2/1987 Martini 249/57
5,641,438 A * 6/1997 Bunyan et al. 264/104
6,054,077 A 4/2000 Comb et al.
6,106,266 A * 8/2000 Ruger 366/76.5
6,390,622 B1 * 5/2002 Muckenhirn et al. 351/161

FOREIGN PATENT DOCUMENTS

DE	871352	7/1953
DE	38 33 776	4/1989
DE	196 47 015 C1	12/1997
DE	197 33 627 C1	6/1998
EP	559582	9/1993
EP	5770622	1/1994
EP	1027979	8/2000
GB	750856	6/1956
JP	10193474	7/1998
JP	10249919	9/1998
WO	WO 8700480	1/1987
WO	WO 9851405	11/1998

OTHER PUBLICATIONS

Article taken from Fortschritt–Berichte Der VDI Zeitschriften entitled "Pheometrische Untersuchungen am System Polyvinylchlorid–Weichmacher" by Bernd, Kuhn, Ravensburg dated 1977, 7 pp 6, 7 and 13–15.

* cited by examiner

Primary Examiner—Mark Eashoo
(74) *Attorney, Agent, or Firm*—Ostrolenk, Faber, Gerb & Soffen, LL

(57) **ABSTRACT**

A method for the metered discharge of a string of a viscous medium, in particular of an abrasive medium containing solid particles, via a nozzle, in which the quantity of the medium is discharged as a function of the speed of the nozzle and is increased or reduced as a function of the acceleration or deceleration of the nozzle.
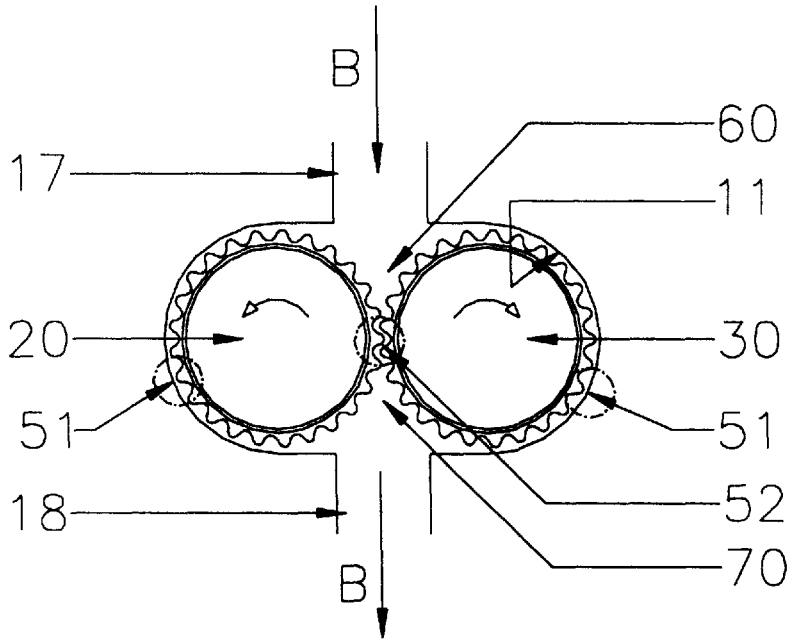
2 Claims, 5 Drawing Sheets