US008418473B2

(12) **United States Patent**
Petty et al.

(10) **Patent No.: US 8,418,473 B2**
(45) **Date of Patent: Apr. 16, 2013**

(54) **PIVOTING LINER HANGER**

(75) Inventors: **Dale William Petty**, Wallingford, CT (US); **Gonzalo F. Martinez**, Stuart, FL (US)

(73) Assignee: **United Technologies Corporation**, Hartford, CT (US)

(*) Notice: Subject to any disclaimer, the term of this patent is extended or adjusted under 35 U.S.C. 154(b) by 861 days.

(21) Appl. No.: **12/131,292**

(22) Filed: **Jun. 2, 2008**

(65) **Prior Publication Data**

US 2009/0293498 A1 Dec. 3, 2009

(51) **Int. Cl.**
F02C 7/20 (2006.01)

(52) **U.S. Cl.**
USPC **60/796**; 60/797; 60/798; 60/799; 403/144

(58) **Field of Classification Search** 60/798, 60/752, 770, 799, 226.1, 796, 797, 800; 403/144
See application file for complete search history.

(56) **References Cited**

U.S. PATENT DOCUMENTS

3,563,564 A * 2/1971 Bartkowiak 280/93.512
4,121,768 A 10/1978 Young
4,466,755 A * 8/1984 Smith 403/36
5,059,055 A 10/1991 DeGress et al.
5,067,324 A 11/1991 Beytes et al.
5,088,279 A * 2/1992 MacGee 60/226.1
5,239,815 A 8/1993 Bareza
5,291,732 A 3/1994 Halila
5,509,749 A * 4/1996 Eifert et al. 403/144
5,782,294 A 7/1998 Froemming et al.
6,442,929 B1 * 9/2002 Kraft et al. 60/39.827
6,912,782 B2 7/2005 Nguyen et al.
7,007,480 B2 3/2006 Nguyen et al.
7,017,334 B2 3/2006 Mayer et al.
7,089,748 B2 * 8/2006 Tiemann 60/800
7,093,440 B2 8/2006 Howell et al.
7,281,695 B2 * 10/2007 Jordan 248/274.1
7,338,244 B2 3/2008 Glessner et al.
2005/0155352 A1 7/2005 Agg
2007/0158527 A1 7/2007 Farah et al.
2008/0022689 A1 1/2008 Farah et al.

* cited by examiner

Primary Examiner — William H Rodriguez
Assistant Examiner — Steven Sutherland
(74) *Attorney, Agent, or Firm* — Carlson, Gaskey & Olds PC

(57) **ABSTRACT**

An exemplary turbine engine link assembly includes a link extending longitudinally from a rod end and terminating at a hemispherical end. The rod end is secured to an engine liner or an engine casing. The hemispherical end is biased toward a corresponding hemispherical recess in the engine liner or in the other of the engine liner or the engine casing.
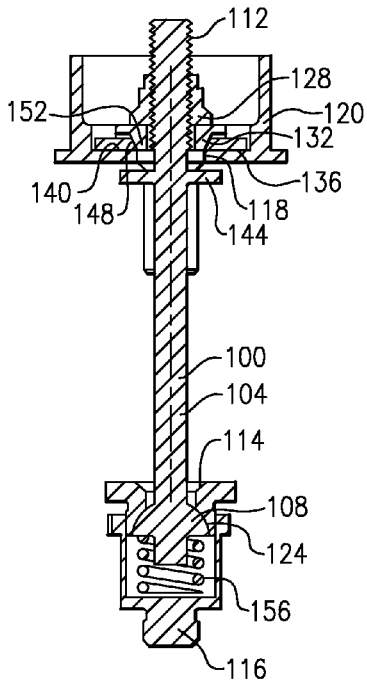
19 Claims, 4 Drawing Sheets