United States Patent [19]

Retter

[11] **Patent Number: 4,913,573**

[45] **Date of Patent: Apr. 3, 1990**

[54] **ALPHA-NUMERIC KEYBOARD**

[76] Inventor: **Dale J. Retter,** 7350 Via Paseo Del Sur, E#206, Scottsdale, Ariz. 85258

[21] Appl. No.: **233,451**

[22] Filed: **Aug. 18, 1988**

Related U.S. Application Data

[63] Continuation-in-part of Ser. No. 015,886, Feb. 18, 1987.

[51] **Int. Cl.**[4] **B41J 5/10**

[52] **U.S. Cl.** **400/489;** 400/485; 400/482

[58] **Field of Search** ..... 400/472, 479, 485, 489, 400/479.2, 715, 473, 472, 480–486, 488, 489, 490, 492; 340/710, 711, 365 A, 712; 341/22; 178/17 A,R,C

[56] **References Cited**

U.S. PATENT DOCUMENTS

470,874	3/1892	Glidden	400/486
760,851	5/1904	Crawford-Frost	400/485
943,466	12/1909	Rowell	400/487
1,336,122	4/1920	Banaji	400/485
1,506,426	8/1924	Hoke	400/485
2,040,248	5/1936	Dvorak et al.	197/100
2,080,457	5/1937	Bower	197/100
2,318,519	5/1943	Palanque	197/100
2,369,807	2/1945	Solon	197/98
2,532,228	11/1950	Hesh	197/13
3,022,878	2/1962	Seibel et al.	197/19
3,633,724	1/1972	Samuel	197/100
3,698,532	10/1972	Dodds	197/100
3,847,263	11/1974	X	197/100
3,937,939	2/1976	Frenkel	235/156
3,945,482	3/1976	Einbinder	197/100
3,965,315	6/1976	Wuenn	200/6 A
3,967,273	6/1976	Knowlton	340/365 S
3,970,185	7/1976	Shelton	197/9
4,029,915	6/1977	Ojima	200/5 A
4,201,489	5/1980	Zapp	400/485
4,211,497	7/1980	Montgomery	400/486
4,241,409	12/1980	Nolf	364/705
4,244,659	1/1981	Malt	400/486
4,255,626	3/1981	Watts et al.	200/6 A
4,310,254	1/1982	D'Angiolillo	400/109
4,332,493	6/1982	Einbinder	400/484
4,584,443	4/1986	Yaeger	200/6 A

FOREIGN PATENT DOCUMENTS

67069	4/1984	Japan	400/715
885074	11/1981	U.S.S.R.	400/489
2076743	12/1981	United Kingdom	400/100
8201345	4/1982	World Int. Prop. O.	400/489
8400518	2/1984	World Int. Prop. O.	400/489

Primary Examiner—Edgar S. Burr
Assistant Examiner—Joseph R. Keating
Attorney, Agent, or Firm—LaValle D. Ptak

[57] **ABSTRACT**

An ergometrically improved computer of typewriter keyboard having the keys arranged and designated so that they are operated using finger movements which substantially mimic those currently employed by a typist using a standard "QWERTY" keyboard. The keyboard is divided into two separate sections, one of which is intended to be used by the right hand of the operator and the other of which is intended to be used by the left hand to permit independent positioning of the two sections relative to one another. Each keyboard section includes a housing having a raised central portion designed to ergometrically support and steady the hands of the operator, in a natural relaxed position from which all of the keys may be operated without significant hand movement. The fingers and thumb are positioned in respective cavities each having a plurality of push button key switches arranged therein for engagement by the thumb and fingers, with a minimal and unique finger movement required to actuate any key. Each key touches a different part of each finger, providing differential tactile feedback. The fingers and thumbs never need to be moved from the cavities which eliminates all "float", and the hands are continually supported in one comfortable position. Extensive utilization of the thumbs is provided. The device is smaller and more versatile than a conventional keyboard.
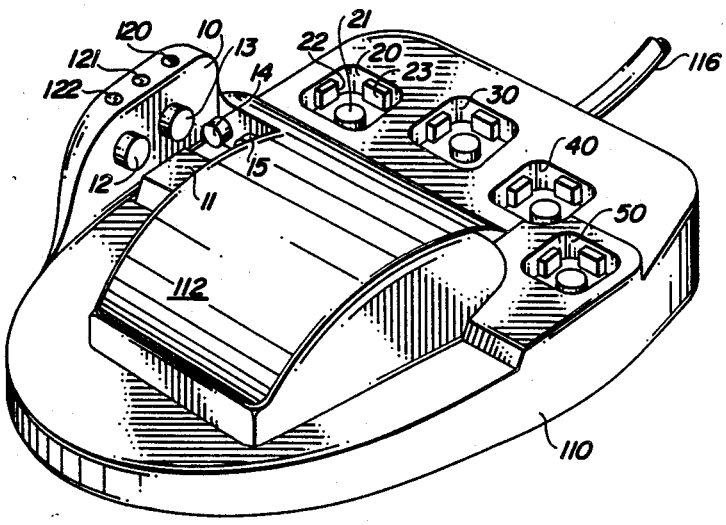
22 Claims, 4 Drawing Sheets