US009411373B2

(12) **United States Patent**
Tureček

(10) **Patent No.: US 9,411,373 B2**
(45) **Date of Patent: Aug. 9, 2016**

(54) **ARRANGEMENT OF PORTABLE DISPLAY SYSTEM FOR RADIATION DETECTION**

(71) Applicant: **Daniel Tureček**, Vsetín (CZ)

(72) Inventor: **Daniel Tureček**, Vsetín (CZ)

(73) Assignee: **INSTITUTE OF EXPERIMENTAL AND APPLIED PHYSICS, CZECH TECHNICAL UNIVERSITY IN PRAGUE**, Prague (CZ)

(*) Notice: Subject to any disclaimer, the term of this patent is extended or adjusted under 35 U.S.C. 154(b) by 50 days.

(21) Appl. No.: **14/622,524**

(22) Filed: **Feb. 13, 2015**

(65) **Prior Publication Data**

US 2015/0234428 A1 Aug. 20, 2015

(51) **Int. Cl.**
G06F 1/16 (2006.01)
G01T 7/00 (2006.01)

(52) **U.S. Cl.**
CPC ***G06F 1/1637*** (2013.01); ***G01T 7/00*** (2013.01)

(58) **Field of Classification Search**
CPC H05K 7/023; H05K 7/20545
USPC 361/679.26, 679.08, 679.47; 365/185.11, 191, 189.17; 455/66.1, 73, 455/343.5, 67.12, 41.2, 456.45, 403; 439/656, 39, 493, 108; 165/80.1, 80.3
See application file for complete search history.

(56) **References Cited**

U.S. PATENT DOCUMENTS

5,181,167	A *	1/1993	Davidson	H05K 7/023 165/80.3
8,111,516	B2 *	2/2012	Goldrian	H05K 7/20545 165/80.1
2004/0149918	A1	8/2004	Craig et al.	
2006/0028305	A1 *	2/2006	Dutta	H01P 3/084 333/328
2009/0012745	A1	1/2009	Longman et al.	

FOREIGN PATENT DOCUMENTS

WO	2014021731	A1	6/2014

* cited by examiner

Primary Examiner — Hung Duong
(74) *Attorney, Agent, or Firm* — Avery N. Goldstein; Blue Filament Law PLLC

(57) **ABSTRACT**

Arrangement of a portable display System for radiation detection, includes an adaptation board (**3**) with minicomputer (**4**) including a processor (**43**), while the adaptation board (**3**) is connected via the earth connector (**31**) and signal connector (**33**) with at least one radiation detector (**1**) arranged on the stack board (**2**) and connected via signal connector (**33**) by pins to the interconnection (**5**), while the adaptation board (**3**) itself is connected with the mini computer (**4**) by pins of the interconnection (**5**).
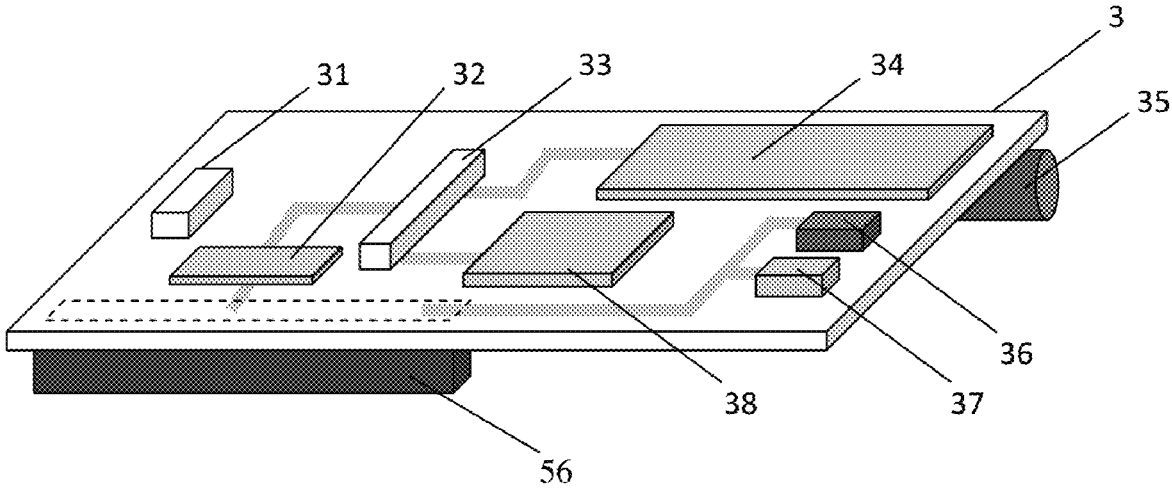
3 Claims, 4 Drawing Sheets