US009410573B1

(12) **United States Patent**
Lu

(10) **Patent No.: US 9,410,573 B1**
(45) **Date of Patent: Aug. 9, 2016**

(54) **BEARING ASSEMBLIES**

(71) Applicant: **US SYNTHETIC CORPORATION**, Orem, UT (US)

(72) Inventor: **Xiaobin Lu**, Orem, UT (US)

(73) Assignee: **US SYNTHETIC CORPORATION**, Orem, UT (US)

(*) Notice: Subject to any disclaimer, the term of this patent is extended or adjusted under 35 U.S.C. 154(b) by 0 days.

(21) Appl. No.: **14/830,302**

(22) Filed: **Aug. 19, 2015**

Related U.S. Application Data

(63) Continuation of application No. 14/489,027, filed on Sep. 17, 2014, now Pat. No. 9,127,713.

(51) **Int. Cl.**
F16C 17/02 (2006.01)
F16C 17/04 (2006.01)
F16C 33/04 (2006.01)

(52) **U.S. Cl.**
CPC ***F16C 17/047*** (2013.01); ***F16C 17/028*** (2013.01); ***F16C 33/043*** (2013.01)

(58) **Field of Classification Search**
CPC F16C 17/03; F16C 17/035; F16C 17/06; F16C 17/065
USPC 384/95, 97, 117, 119, 122, 125, 302, 384/303, 306, 308, 312, 124
See application file for complete search history.

(56) **References Cited**

U.S. PATENT DOCUMENTS

1,586,443 A * 5/1926 Flintermann F16C 17/065 384/125
3,565,498 A 2/1971 Leopard et al.
4,410,054 A 10/1983 Nagel et al.
4,496,251 A * 1/1985 Ide F16C 17/035 384/117
4,560,014 A 12/1985 Geczy
5,364,192 A 11/1994 Damm et al.
5,368,398 A 11/1994 Damm et al.
5,480,233 A 1/1996 Cunningham
5,503,479 A 4/1996 Ide
5,549,392 A * 8/1996 Anderson F16C 17/035 384/104
5,938,344 A * 8/1999 Sabin F16C 17/035 384/125
6,460,635 B1 10/2002 Kalsi et al.
7,842,111 B1 11/2010 Sani
7,866,418 B2 1/2011 Bertagnolli et al.
7,901,137 B1 3/2011 Peterson
8,236,074 B1 8/2012 Bertagnolli et al.
8,496,075 B2 7/2013 Scott et al.
(Continued)

FOREIGN PATENT DOCUMENTS

WO WO 02/35051 5/2002
WO WO 2006/083756 8/2006

OTHER PUBLICATIONS

U.S. Appl. No. 14/489,027, filed Sep. 17, 2014, Lu.
U.S. Appl. No. 14/489,027, filed Feb. 5, 2015, Office Action.
(Continued)

Primary Examiner — Phillip A Johnson
(74) *Attorney, Agent, or Firm* — Dorsey & Whitney LLP

(57) **ABSTRACT**

Embodiments of the invention relate a bearing assembly, which may be operated at least partially hydrodynamically, and includes a support ring having reduced-thickness portions configured to elastically flex for promoting hydrodynamic fluid flow between opposing bearings of the bearing apparatus incorporated in a bearing apparatus. The disclosed bearing assemblies and apparatuses may be employed in downhole motors of a subterranean drilling system or other mechanical systems.
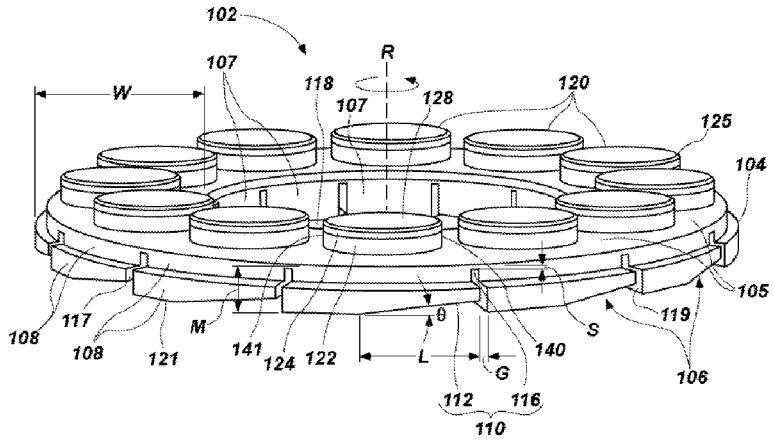
18 Claims, 16 Drawing Sheets