# United States Patent [19]

**Morstad**

[11] **Patent Number: 4,702,573**

[45] **Date of Patent: Oct. 27, 1987**


[54] **VARIABLE POWERED CONTACT LENS**


[76] Inventor: **David P. Morstad,** 906 20th St., NW., Minot, N. Dak. 58701



[21] Appl. No.: **899,869**

[22] Filed: **Aug. 25, 1986**

[51] **Int. Cl.**[4] ..... **G02C 7/04;** G02C 7/06

[52] **U.S. Cl.** ..... **351/161;** 351/160 H

[58] **Field of Search** ..... 351/160 R, 160 H, 161, 351/162



[56] **References Cited**

U.S. PATENT DOCUMENTS

| | | | |
|---|---|---|---|
| 3,279,878 | 10/1966 | Long | 351/161 |
| 3,300,909 | 1/1967 | Cooper et al. | 361/161 |
| 3,472,581 | 10/1969 | Bronstein | 351/161 |
| 3,485,556 | 12/1969 | Naujokas | 351/161 |
| 3,684,357 | 8/1972 | Tsuetaki | 351/161 |
| 4,174,156 | 11/1979 | Glorieux | 351/161 |
| 4,199,231 | 4/1980 | Evans | 351/161 |
| 4,324,461 | 4/1982 | Salvatori | 351/161 |
| 4,418,991 | 12/1983 | Breger | 351/161 |



*Primary Examiner*—Bruce Y. Arnold
*Assistant Examiner*—Scott J. Sugarman
*Attorney, Agent, or Firm*—Zarley, McKee, Thomte, Voorhees & Sease



[57] **ABSTRACT**

A soft contact lens of soft opthalmic plastic material with an anterior portion resiliently deformable by movement of the eye. The lens is of the scleral-corneal type, and has a base-down prism portion which moves under the lower eyelid. When the eye gazes downwardly and inwardly, pressure of the lower lid on the thickened portion of the lens causes a bulging of the anterior portion of the lens near the center, creating an increase in diopter power. A slab-off bevel of the lens sides shapes the bulge into proper spherical condition for clearer vision.

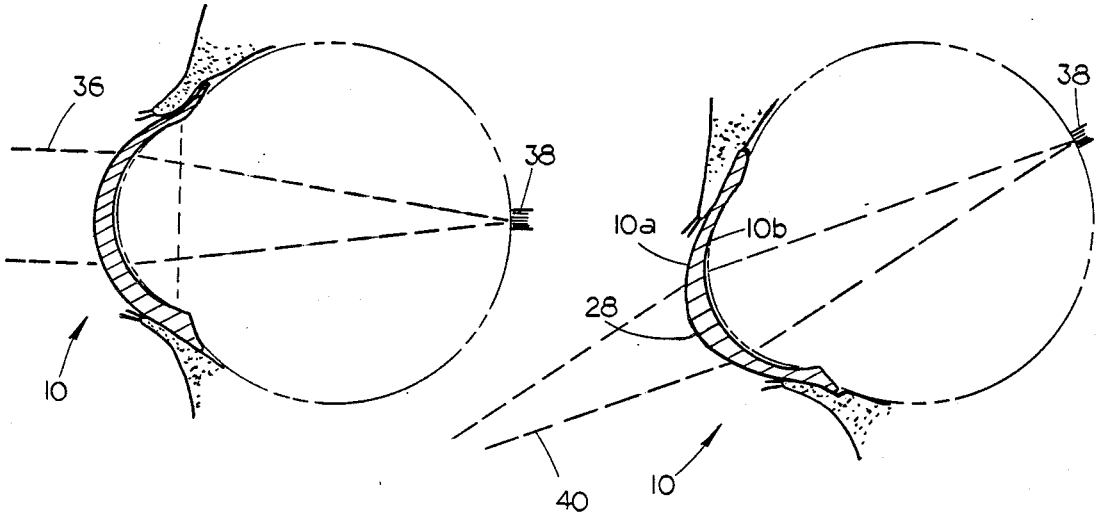
**6 Claims, 4 Drawing Figures**