US006501073B1

(12) **United States Patent**
Mylchreest et al.

(10) **Patent No.: US 6,501,073 B1**
(45) **Date of Patent: Dec. 31, 2002**

(54) **MASS SPECTROMETER WITH A PLURALITY OF IONIZATION PROBES**

(75) Inventors: **Iain C. Mylchreest**, Gilroy, CA (US); **Tina A. E. Hemenway**, San Jose, CA (US); **Richard E. Hartford**, Aromas, CA (US)

(73) Assignee: **Thermo Finnigan LLC**, San Jose, CA (US)

(*) Notice: Subject to any disclaimer, the term of this patent is extended or adjusted under 35 U.S.C. 154(b) by 35 days.

(21) Appl. No.: **09/684,744**

(22) Filed: **Oct. 4, 2000**

(51) **Int. Cl.**[7] **H01J 49/26**; H01J 49/00; B01D 59/44

(52) **U.S. Cl.** ..... **250/288**; 250/423 R

(58) **Field of Search** ..... 250/306, 288, 250/423 R

(56) **References Cited**

U.S. PATENT DOCUMENTS

5,668,370 A	9/1997	Yano et al.	.....	250/288
6,066,848 A	5/2000	Kassel et al.	.....	250/288
6,207,954 B1 *	3/2001	Andrien et al.	.....	250/288
6,318,157 B1 *	11/2001	Corso	.....	73/61.52

FOREIGN PATENT DOCUMENTS

EP	0966022 A2	12/1999
WO	WO 99/13492	3/1999
WO	WO 99/65058	12/1999

OTHER PUBLICATIONS

de Biasi, Verner et al., "High Throughput Liquid Chromatography/Mass Spectrometric Analyses Using a Novel Multiplexed Electrospray Interface", *Rapid Commun. Mass Spectrom*, 13 (1999) 1165–1168.

* cited by examiner

Primary Examiner—Bruce Anderson
Assistant Examiner—Zia R. Hashmi
(74) *Attorney, Agent, or Firm*—Dorsey & Whitney LLP

(57) **ABSTRACT**

A multiple sample mass spectrometer having multiple atmospheric pressure ionization probes, each forming an ion spray with passages associated with each of said ion sprays for introducing sample ions into the mass spectrometer for analysis. The flow of ions through selected passages is selectively blocked whereby to permit analysis of ions from selected ionization probes.
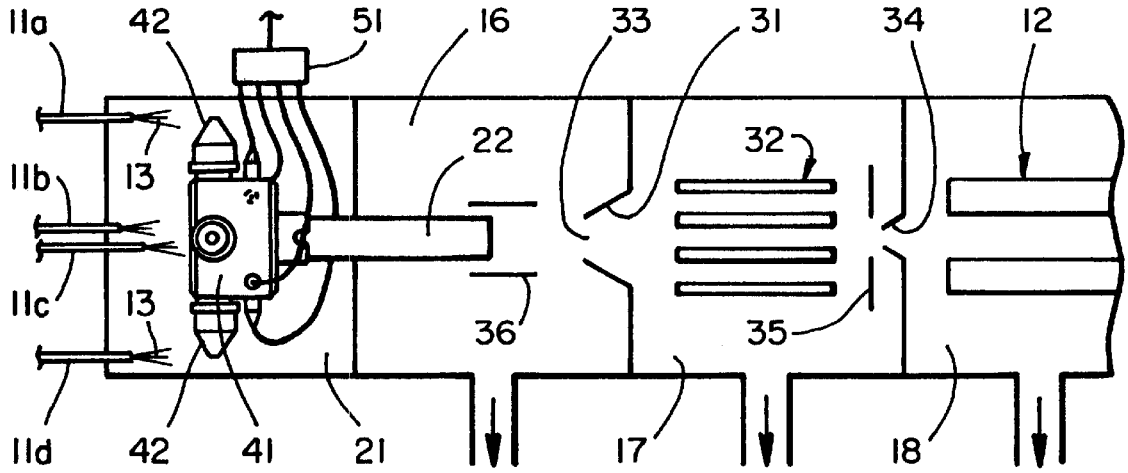
16 Claims, 6 Drawing Sheets