United States Patent [19]

Schlunz et al.

[11] **Patent Number: 4,598,472**

[45] **Date of Patent: Jul. 8, 1986**

[54] **METHOD FOR FORMING A HEMISPHERICALLY SHAPED SWITCH ASSEMBLY**

[75] Inventors: **James R. Schlunz; Donald G. Stillie,** both of Winston-Salem, N.C.

[73] Assignee: **AMP Incorporated,** Harrisburg, Pa.

[21] Appl. No.: **524,956**

[22] Filed: **Aug. 19, 1983**

[51] **Int. Cl.**[4] **H05K 3/12**

[52] **U.S. Cl.** ..... **29/848;** 29/846; 156/285; 200/159 B

[58] **Field of Search** ..... 29/846, 848, 849, 825; 156/285; 200/159 B

[56] **References Cited**

U.S. PATENT DOCUMENTS

3,732,389	5/1973	Kaelin et al.	200/159 B X
3,818,823	6/1974	Bond	156/285 X
3,860,771	1/1975	Lynn et al.	200/5 A
3,886,335	5/1975	Hendricks	200/1 R
4,066,853	1/1978	Zenk	200/5 A
4,066,855	1/1978	Zenk	200/5 A
4,143,253	3/1979	Wagner et al.	200/5 A
4,194,938	3/1980	Figge et al.	156/224 X
4,360,716	11/1982	Fiorella	200/5 A
4,407,685	10/1983	Hankland	156/285 X
4,463,055	7/1984	Hodges	156/285 X

FOREIGN PATENT DOCUMENTS

24228 3/1956 Fed. Rep. of Germany 156/285

OTHER PUBLICATIONS

IBM Tech. Discl. Bulletin, vol. 15, No. 2, Jul. 1972, pp. 544–545 by Goodman et al.

IBM Tech. Discl. Bull., vol. 9, No. 10, Mar. 1967, p. 1411 by R. F. Penoyer.

Primary Examiner—Howard N. Goldberg

Assistant Examiner—Carl J. Arbes

Attorney, Agent, or Firm—Katherine A. Nelson

[57] **ABSTRACT**

A hemispherically shaped membrane switch assembly for attaching to generally hemispherical surfaces such as cathode ray tubes is disclosed. Also disclosed are a method and apparatus for forming the assembly. The assembly is comprised of two layers of transparent film having spaced-apart conductors on the internal surfaces of both layers. The internal surfaces are separated by spacing means, the spacing means being discontinuous at the switch sites. The conductors on the two layers cross and are spaced apart at the switch sites. The assembly is hemispherically formed to the same radius as the hemispherical surface on which the assembly is to be mounted. The assembly mounts flush to the hemispherical surface and conforms uniformly to its surface thus reducing distortion and parallax.
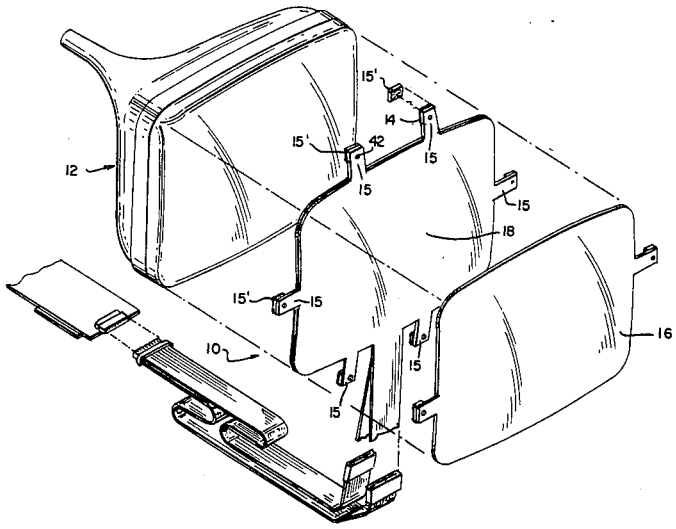
4 Claims, 13 Drawing Figures