United States Patent [19]

Morcher et al.

[11] **4,285,072**

[45] **Aug. 25, 1981**

[54] **ANTERIOR-POSTERIOR INTRAOCULAR LENS**

[75] Inventors: **Kurt A. Morcher**, Stuttgart, Fed. Rep. of Germany; **Leo H. Loones**, Knokke-Heist, Belgium; **Cornelius D. Binkhorst**, Terneuzen, Netherlands

[73] Assignee: **Harry H. LeVeen**, Charleston, S.C.

[21] Appl. No.: **38,906**

[22] Filed: **May 14, 1979**

[51] **Int. Cl.**[3] **A61F 1/16**

[52] **U.S. Cl.** **3/13**

[58] **Field of Search** 3/13

[56] **References Cited**

U.S. PATENT DOCUMENTS

3,673,616	7/1972	Fedorov et al.	3/13
3,711,870	1/1973	Deitrick	3/13
3,866,249	2/1975	Flom	3/13
3,906,551	9/1975	Otter	3/13
3,913,148	10/1975	Potthast	3/13
3,922,728	12/1975	Krasnov	3/13
3,925,825	12/1975	Richards et al.	3/13
3,971,073	7/1976	Richards et al.	3/13
3,975,779	8/1976	Richards et al.	3/13
3,979,780	9/1976	Boniuk	3/13
3,986,214	10/1976	Krasnov	3/13
3,996,626	12/1976	Richards et al.	3/13
3,996,627	12/1976	Deeg et al.	3/13
4,010,496	3/1977	Neefe	3/13
4,014,049	3/1977	Richards et al.	3/13
4,041,552	8/1977	Ganias	3/13
4,053,953	10/1977	Flom et al.	3/13
4,056,855	11/1977	Kelman	3/13
4,073,014	2/1978	Poler	3/13
4,073,015	2/1978	Peyman et al.	3/13
4,077,071	3/1978	Freeman	3/13
4,079,470	3/1978	Deeg et al.	3/13
4,087,866	5/1978	Choyce et al.	3/13
4,110,848	9/1978	Jensen	3/13
4,159,546	7/1979	Shearing	3/13

Primary Examiner—Clifford D. Crowder
Attorney, Agent, or Firm—Gipple and Hale

[57] **ABSTRACT**

An intraocular lens and method for implanting the same in the posterior chamber of an eye having a posterior capsule. The lens has a lens support system including anterior supports which allows it to be placed in the anterior chamber of the eye against the iris and posterior supports which extend down into the posterior chamber and capsule for capsular fixation. After capsular fixation has occurred the pupil and iris of the eye is dilated, so that the anterior supports do not engage the iris. Upon reconstriction of the pupil the iris rides back over the anterior supports and over the face of the lens, positioning the lens in the posterior chamber with the lens being mounted in the chamber by the support system.
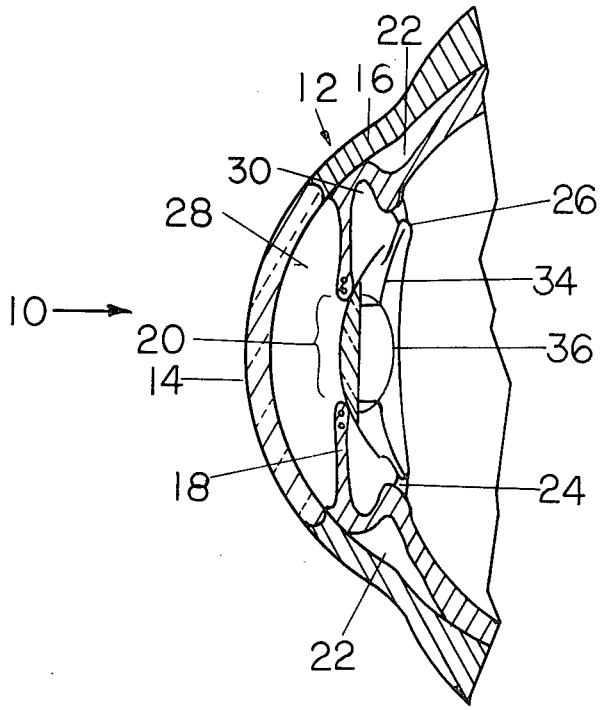
17 Claims, 21 Drawing Figures