April 21, 1959 N. KIRK 2,883,272

APPARATUS FOR THE CONTINUOUS POLYMERIZATION OF ORGANOPOLYSILOXANES

Filed Sept. 13, 1955

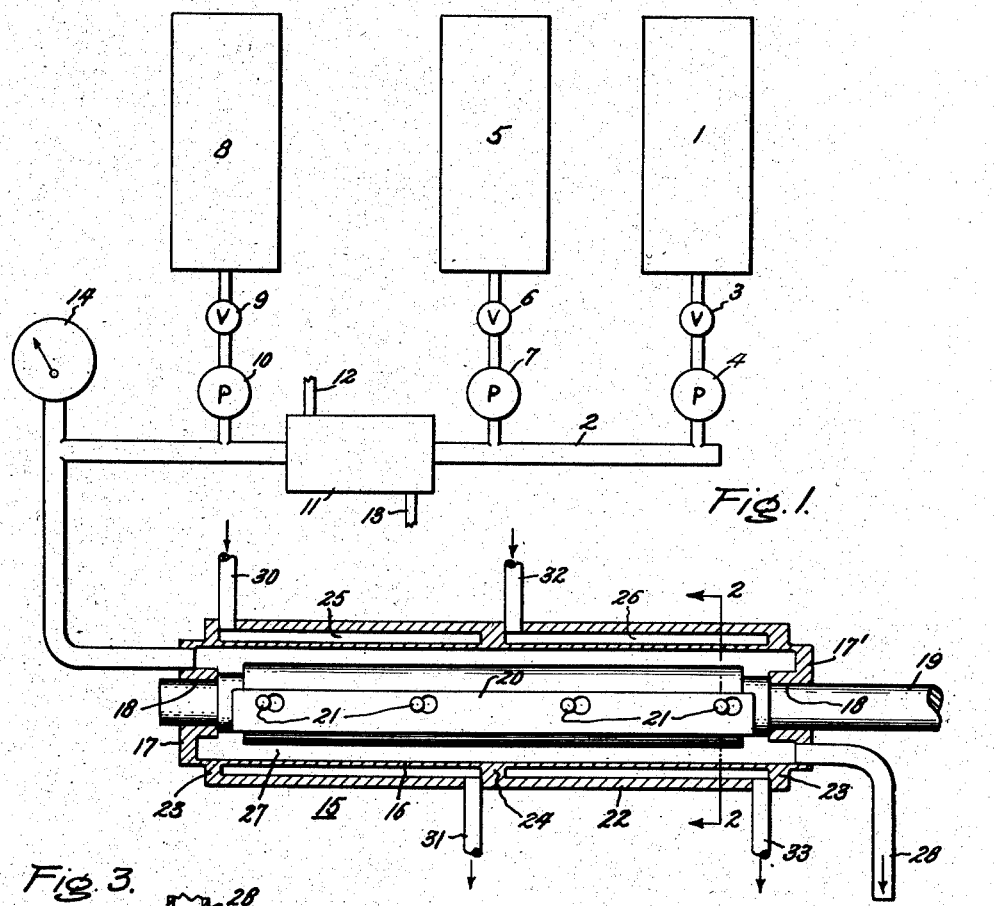

Fig. 1.

Fig. 3.

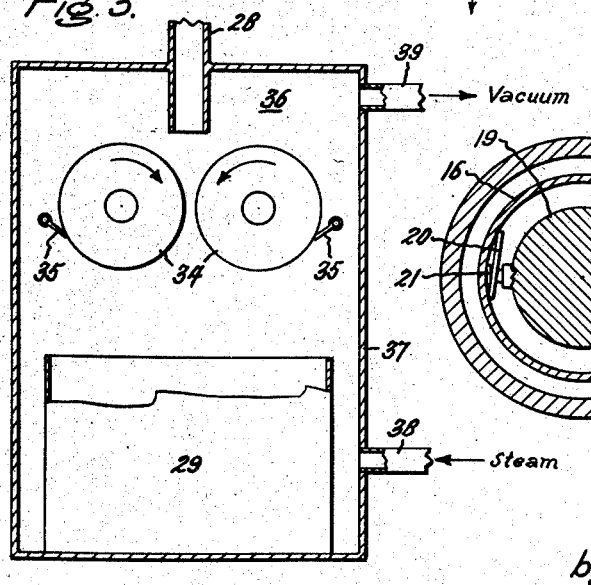

Fig. 2.

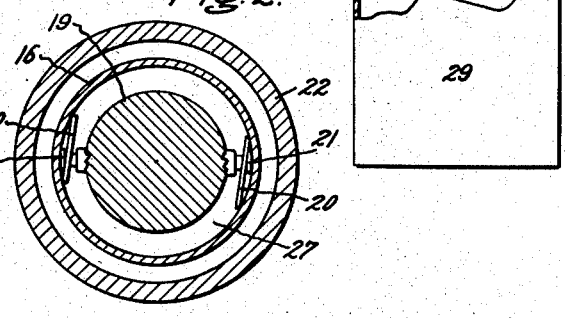

Inventor:
Norman Kirk,
by Paul A. Frank
His Attorney.