Sept. 4, 1928. **1,683,072**

E. H. HEBERN

ELECTRIC CODE MACHINE

Original Filed Nov. 20, 1923 4 Sheets-Sheet 1

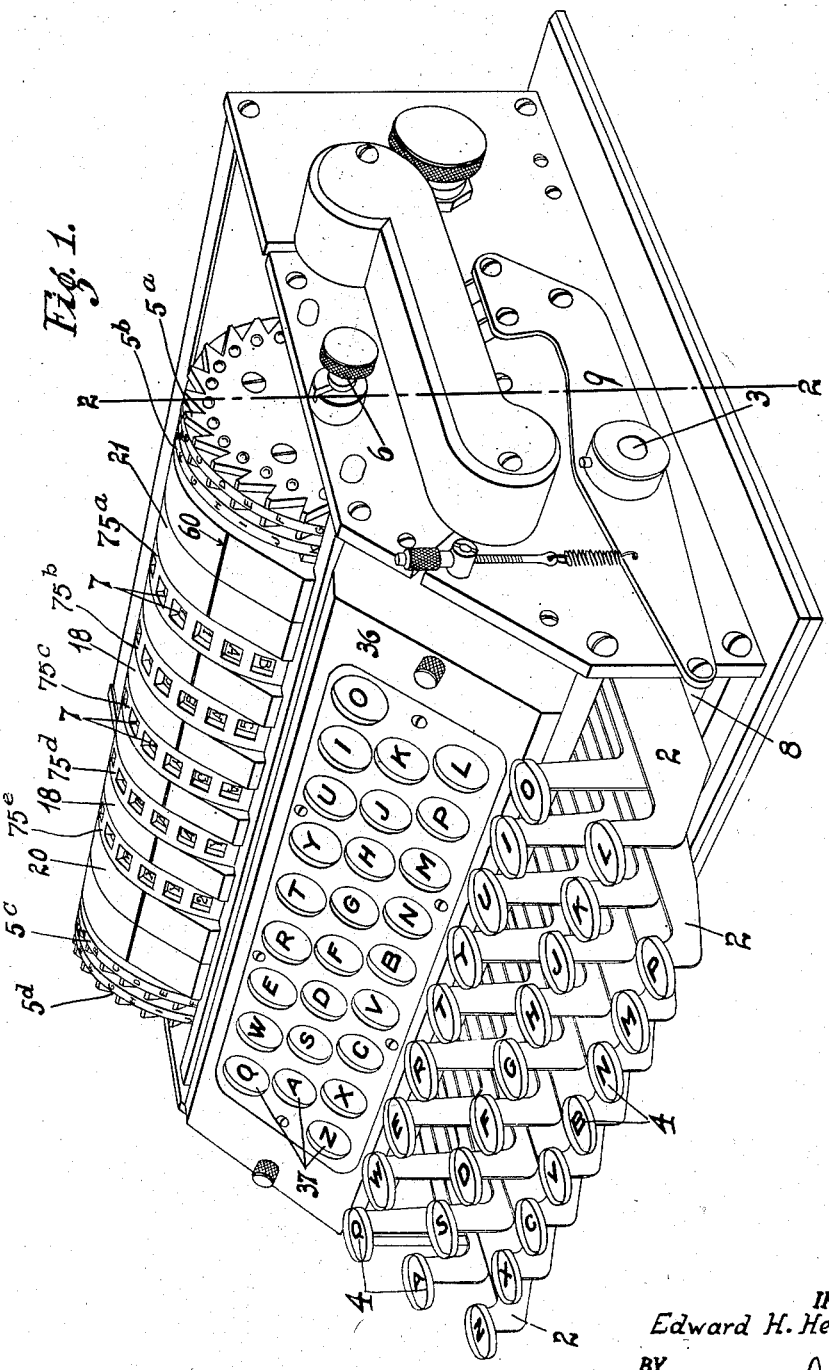

INVENTOR.
Edward H. Hebern.
BY
Harry C. Schroeder
ATTORNEYS.