US008579972B2

(12) **United States Patent**
Rombach

(10) **Patent No.: US 8,579,972 B2**
(45) **Date of Patent: Nov. 12, 2013**

(54) **CONSTRUCTION OF AN INTRAOCULAR ARTIFICIAL LENS**

(75) Inventor: **Michiel Christiaan Rombach**, Breda (NL)

(73) Assignee: **Akkolens International B.V.** (NL)

(*) Notice: Subject to any disclaimer, the term of this patent is extended or adjusted under 35 U.S.C. 154(b) by 638 days.

(21) Appl. No.: **11/885,133**

(22) PCT Filed: **Mar. 9, 2006**

(86) PCT No.: **PCT/NL2006/050050**

§ 371 (c)(1),
(2), (4) Date: **Jul. 25, 2008**

(87) PCT Pub. No.: **WO2006/118452**

PCT Pub. Date: **Nov. 9, 2006**

(65) **Prior Publication Data**

US 2009/0062912 A1 Mar. 5, 2009

(30) **Foreign Application Priority Data**

Mar. 9, 2005 (NL) 1028496
May 13, 2005 (NL) 1029041

(51) **Int. Cl.**
A61F 2/16 (2006.01)

(52) **U.S. Cl.**
USPC **623/6.34**; 623/6.49

(58) **Field of Classification Search**
USPC 623/6.11–6.62
See application file for complete search history.

(56) **References Cited**

U.S. PATENT DOCUMENTS

3,305,294	A *	2/1967	Alvarez	351/159.42
4,657,546	A *	4/1987	Shearing	623/6.21
4,863,468	A	9/1989	Feinbloom et al.	
4,994,082	A	2/1991	Richards et al.	
5,443,506	A	8/1995	Garabet	
5,824,074	A	10/1998	Koch	
6,197,059	B1 *	3/2001	Cumming	623/6.39
6,616,691	B1 *	9/2003	Tran	623/6.11
7,615,056	B2 *	11/2009	Ayton et al.	606/107
2002/0002404	A1 *	1/2002	Sarfarazi	623/6.34
2002/0173847	A1 *	11/2002	Pham et al.	623/6.26
2004/0158322	A1 *	8/2004	Shen	623/6.33
2006/0241752	A1 *	10/2006	Israel	623/6.34
2009/0062912	A1 *	3/2009	Rombach	623/6.32
2010/0106245	A1 *	4/2010	Rombach et al.	623/6.39

FOREIGN PATENT DOCUMENTS

EP	0162573	11/1985
NL	1025622	9/2005
WO	2005084587	9/2005

* cited by examiner

Primary Examiner — Paul Prebilic
(74) *Attorney, Agent, or Firm* — The Webb Law Firm, P.C.

(57) **ABSTRACT**

This invention concerns an intraocular artificial lens with variable optical power which lens is comprised of two optical elements which can be shifted relatively to each other in a direction perpendicular to the optical axis wherein the optical elements have such a shape that they exhibit, in combination, different optical powers at different relative positions and positioning means for positioning the optical elements in the eye and driving means for at least one of the optical elements to execute a movement relative to the other optical element and whereby the positioning means provide for forcing the optical elements to a resting position.
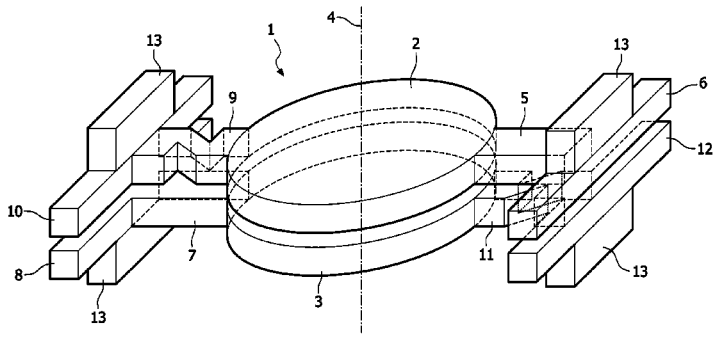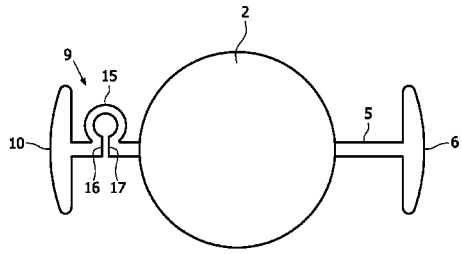
1 Claim, 4 Drawing Sheets