US005650872A

United States Patent [19]

Saxe et al.

[11] Patent Number: 5,650,872

[45] Date of Patent: Jul. 22, 1997

[54] **LIGHT VALVE CONTAINING ULTRAFINE PARTICLES**

[75] Inventors: **Robert L. Saxe**, New York; **Robert I. Thompson**, Plainview; **Matthew Forlini**, Ozone Park, all of N.Y.

[73] Assignee: **Research Frontiers Incorporated**, Woodbury, N.Y.

[21] Appl. No.: **372,669**

[22] Filed: **Jan. 13, 1995**

Related U.S. Application Data

[63] Continuation-in-part of Ser. No. 351,665, Dec. 8, 1994, abandoned.

[51] **Int. Cl.**[6] **G02B 26/00**

[52] **U.S. Cl.** **359/296**

[58] **Field of Search** 359/296

[56] **References Cited**

U.S. PATENT DOCUMENTS

3,773,684	11/1973	Marks	348/18
4,207,841	6/1980	Saxe	350/374
4,407,565	10/1983	Saxe	350/374
4,877,313	10/1989	Saxe et al.	350/391
5,002,701	3/1991	Saxe	252/586
5,030,669	7/1991	Hendrickson et al.	523/383
5,104,210	4/1992	Tokas	359/296
5,106,533	4/1992	Hendrickson et al.	252/314
5,130,057	7/1992	Saxe	252/585
5,326,692	7/1994	Brinkley et al.	435/6

Primary Examiner—Georgia Y. Epps
Assistant Examiner—Thomas Robbins
Attorney, Agent, or Firm—Graham & James LLP

[57] **ABSTRACT**

An electro-optical device, such as a light valve, has a cell formed of opposed cell walls, a light-modulating unit comprising a suspension containing anisometric particles suspended in a liquid suspending medium between the cell walls, and opposed electrodes operatively associated with the cell walls for applying an electrical field across the suspension, the anisometrically shaped particles having an average particle size of about 0.1 microns or less.
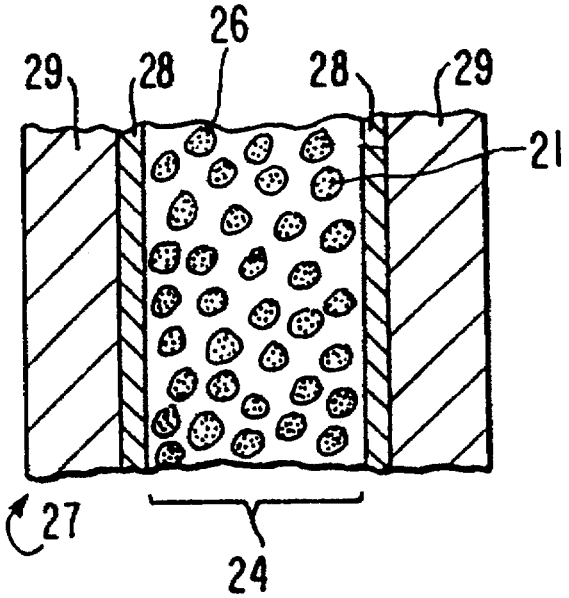
7 Claims, 2 Drawing Sheets