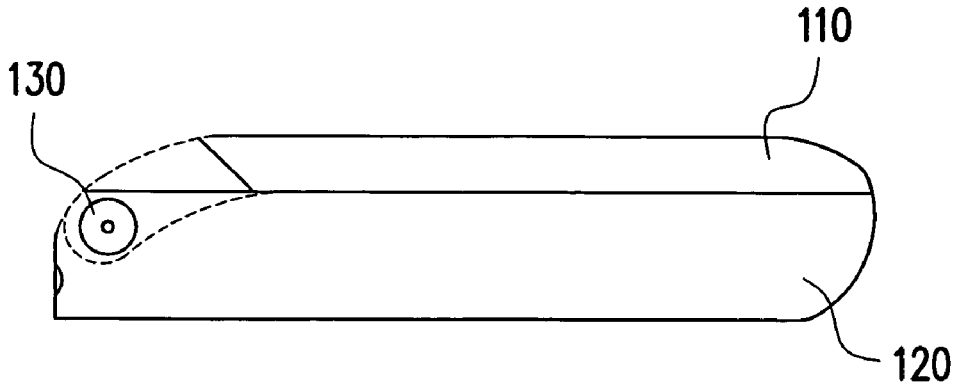

FIG. 1A (PRIOR ART)

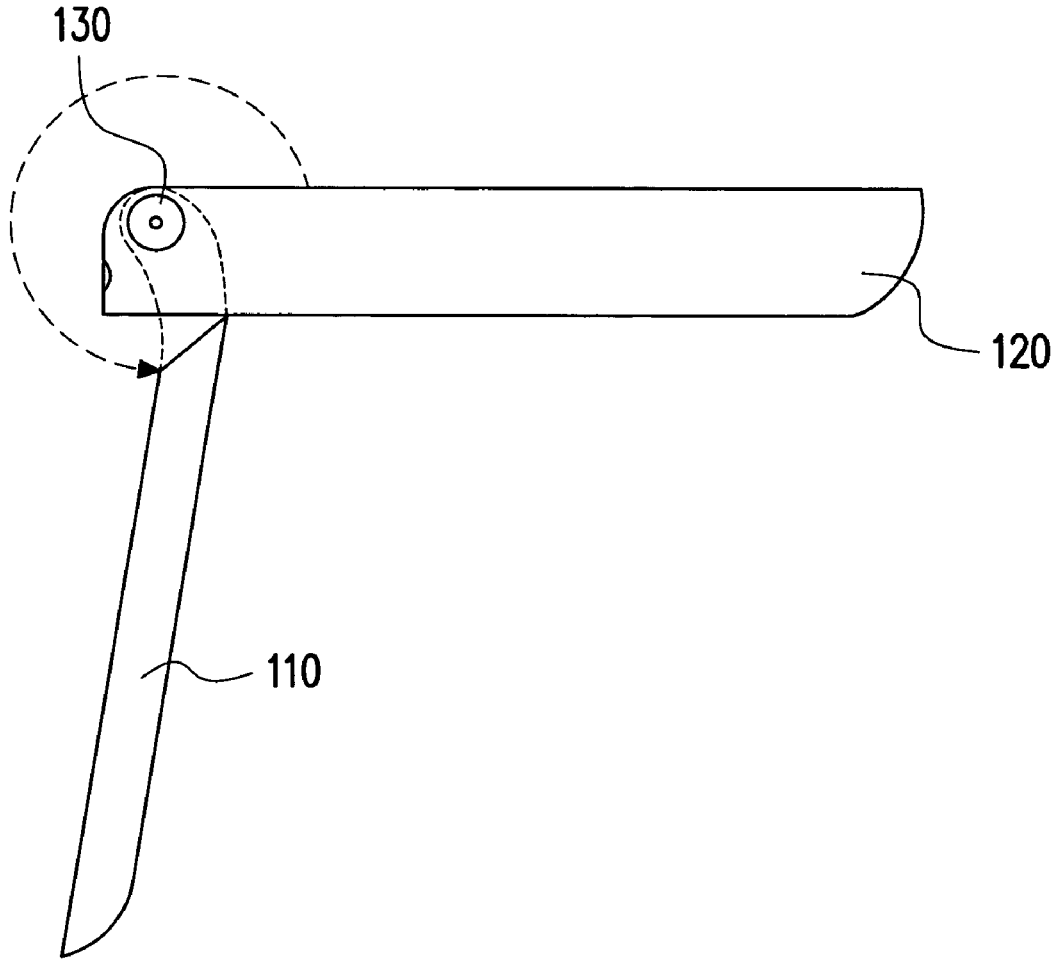

FIG. 1B (PRIOR ART)