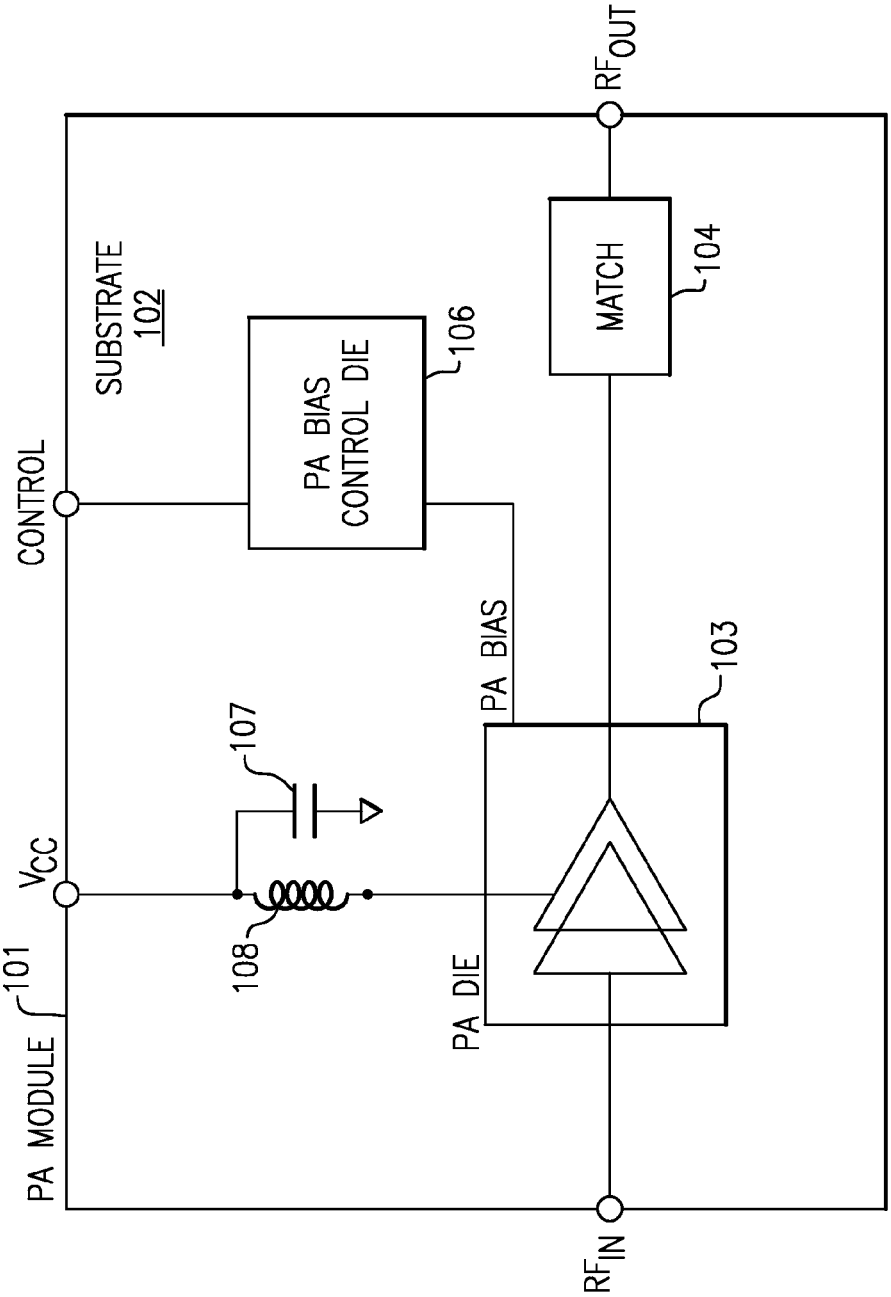
PA MODULE
101
CONTROL
SUBSTRATE
102
PA BIAS
CONTROL DIE
106
VCC
107
108
PA BIAS
PA DIE
103
MATCH
104
RFOUT
RFIN

FIG.1