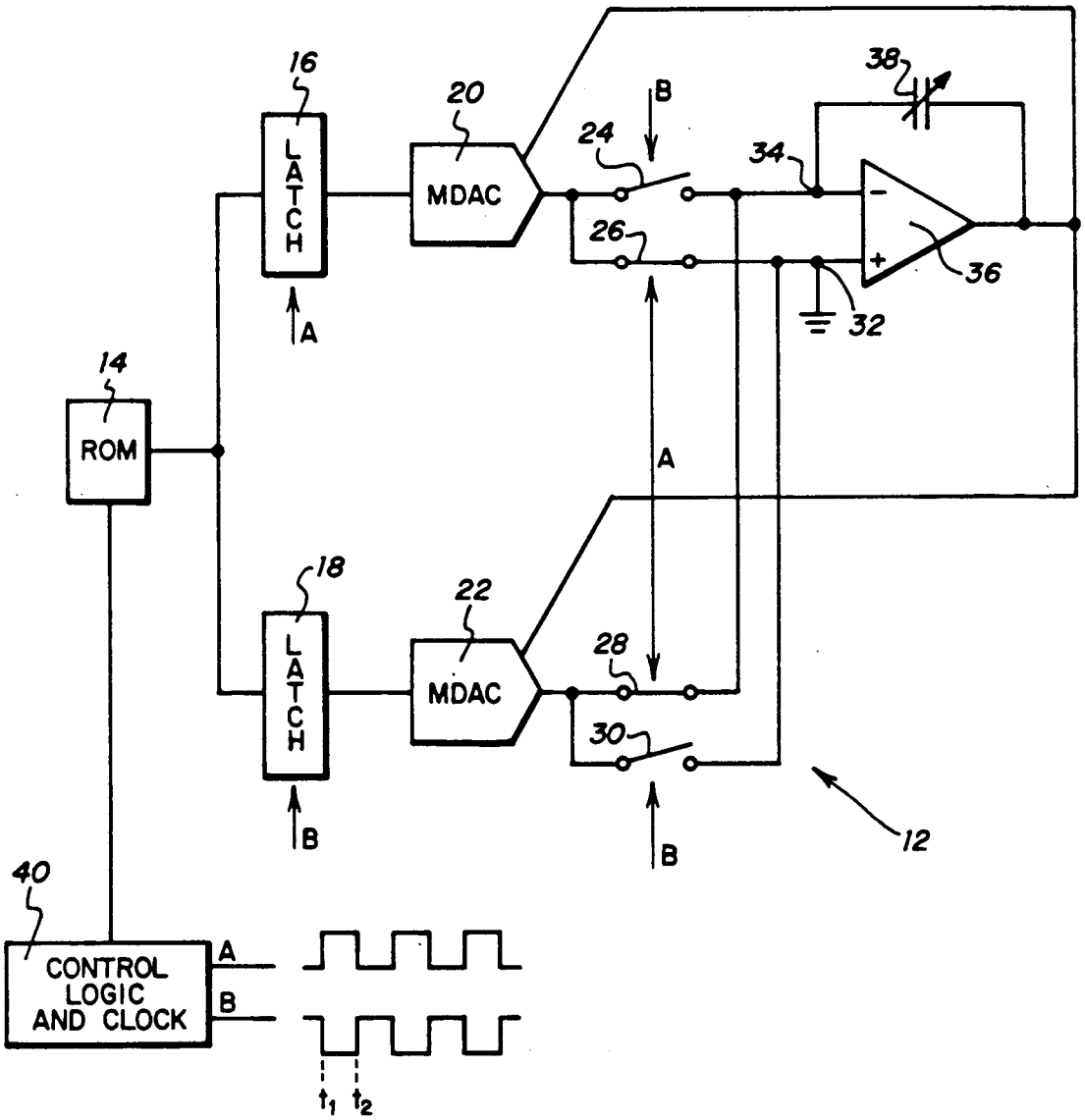
16
LATCH
A
20
MDAC
24
B
26
34
38
36
32
14
ROM
A
18
LATCH
B
22
MDAC
28
30
B
12
40
CONTROL LOGIC AND CLOCK
A
B
t_1 t_2

FIG. 1