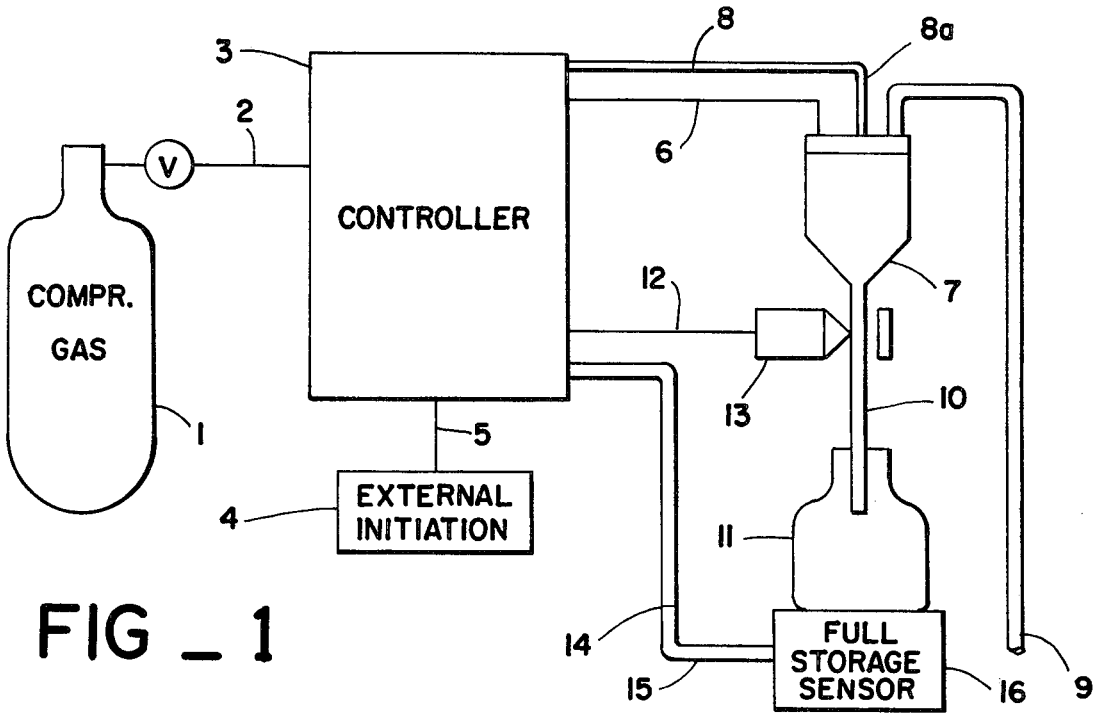
CONTROLLER
COMPR. GAS
EXTERNAL INITIATION
FULL STORAGE SENSOR
V
1
2
3
4
5
6
7
8
8a
9
10
11
12
13
14
15
16

FIG _ 1

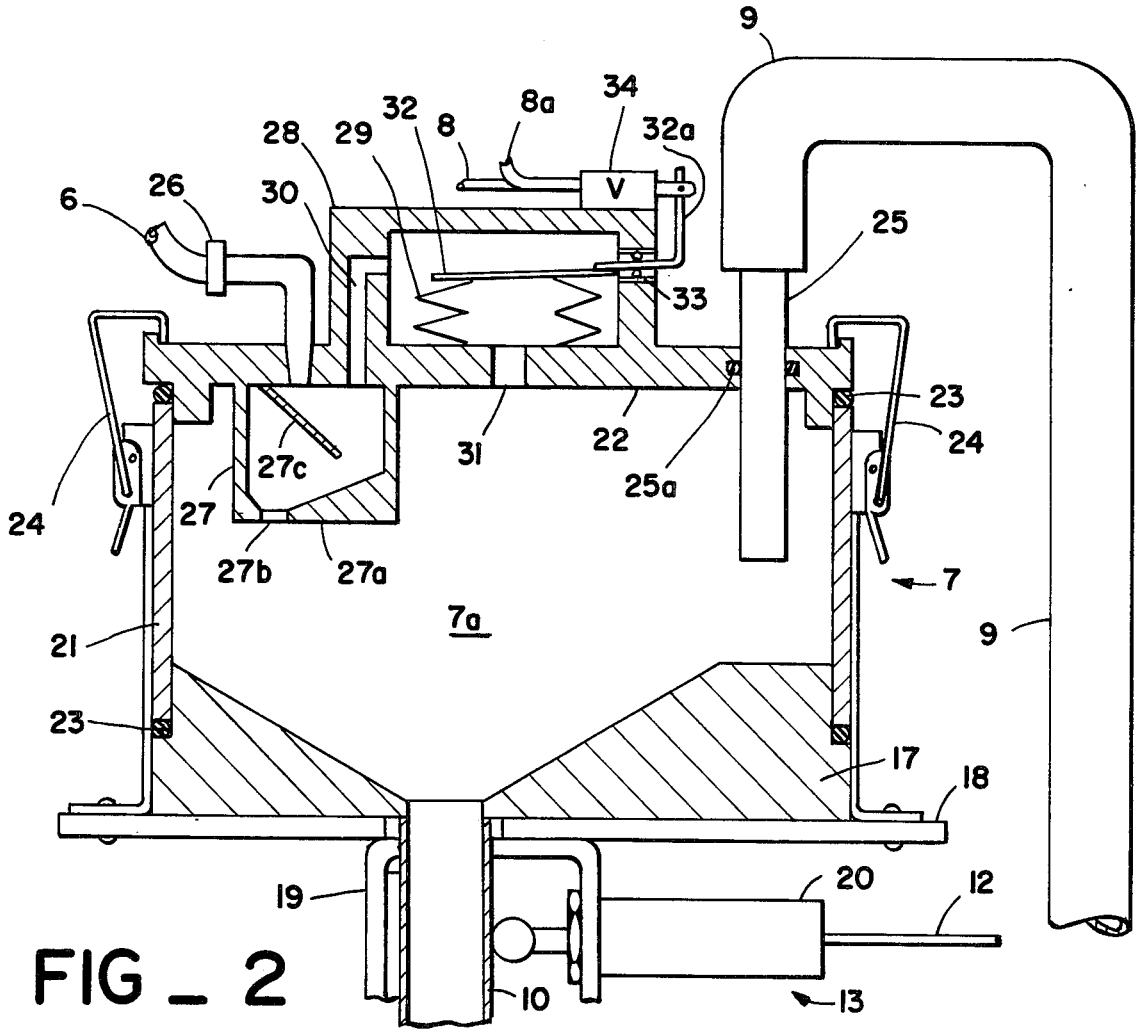
V
6
7
7a
8
8a
9
10
12
13
17
18
19
20
21
22
23
24
25
25a
26
27
27a
27b
27c
28
29
30
31
32
32a
33
34

FIG _ 2