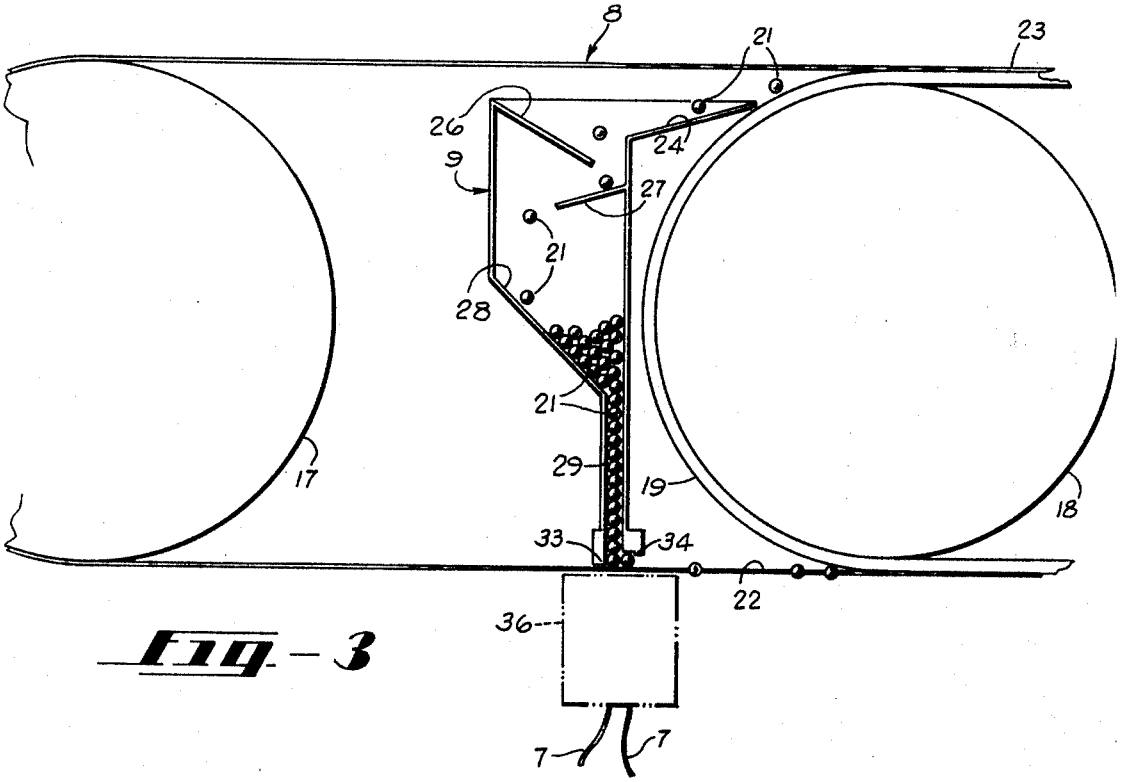

Fig. – 3

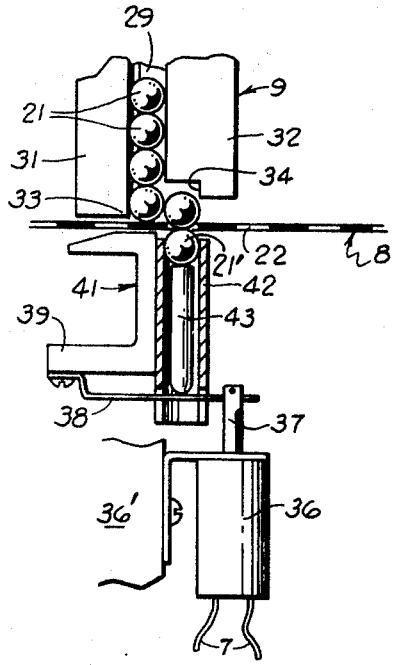

Fig. – 4

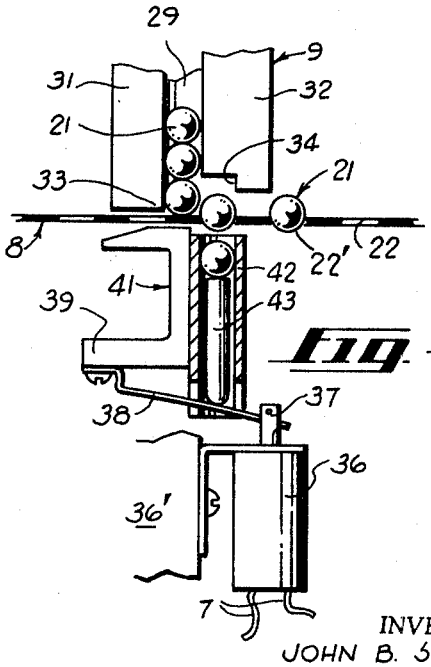

Fig. – 5

INVENTORS
JOHN B. SKEWIS
JAMES Y. LAWRIE
BY
Arlington C. White
ATTORNEY