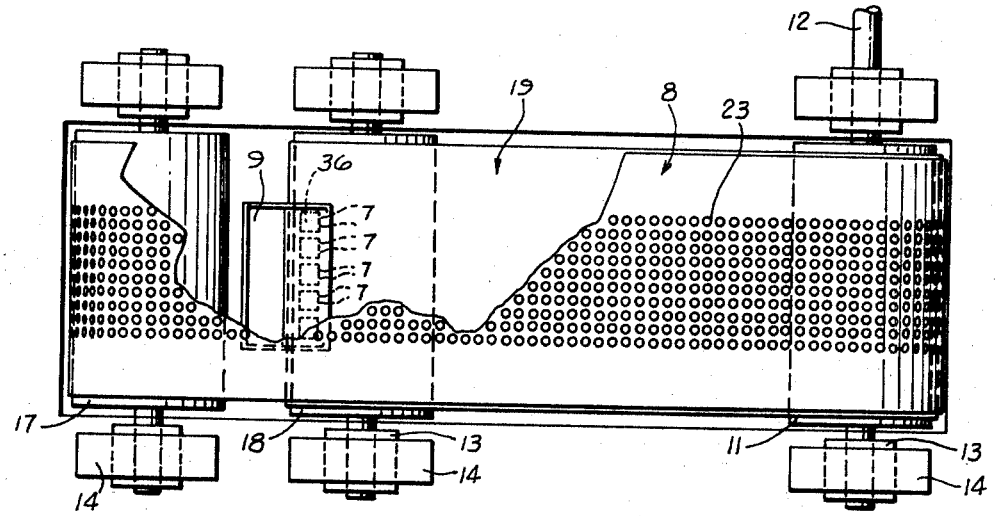

fig. -1

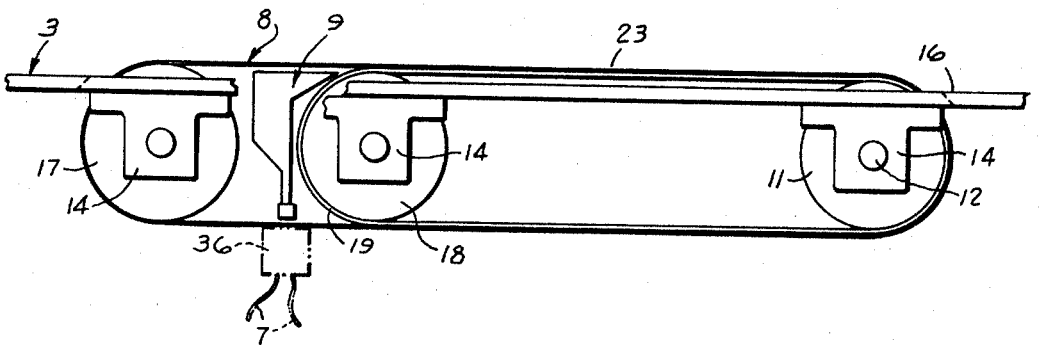

fig. - 2

INVENTORS
JOHN B. SKEWIS
JAMES Y. LAWRIE
BY Arlington C. White
ATTORNEY