April 28, 1953 F. E. HAMILTON ET AL 2,636,672

SELECTIVE SEQUENCE ELECTRONIC CALCULATOR

Filed Jan. 19, 1949 148 Sheets-Sheet 1

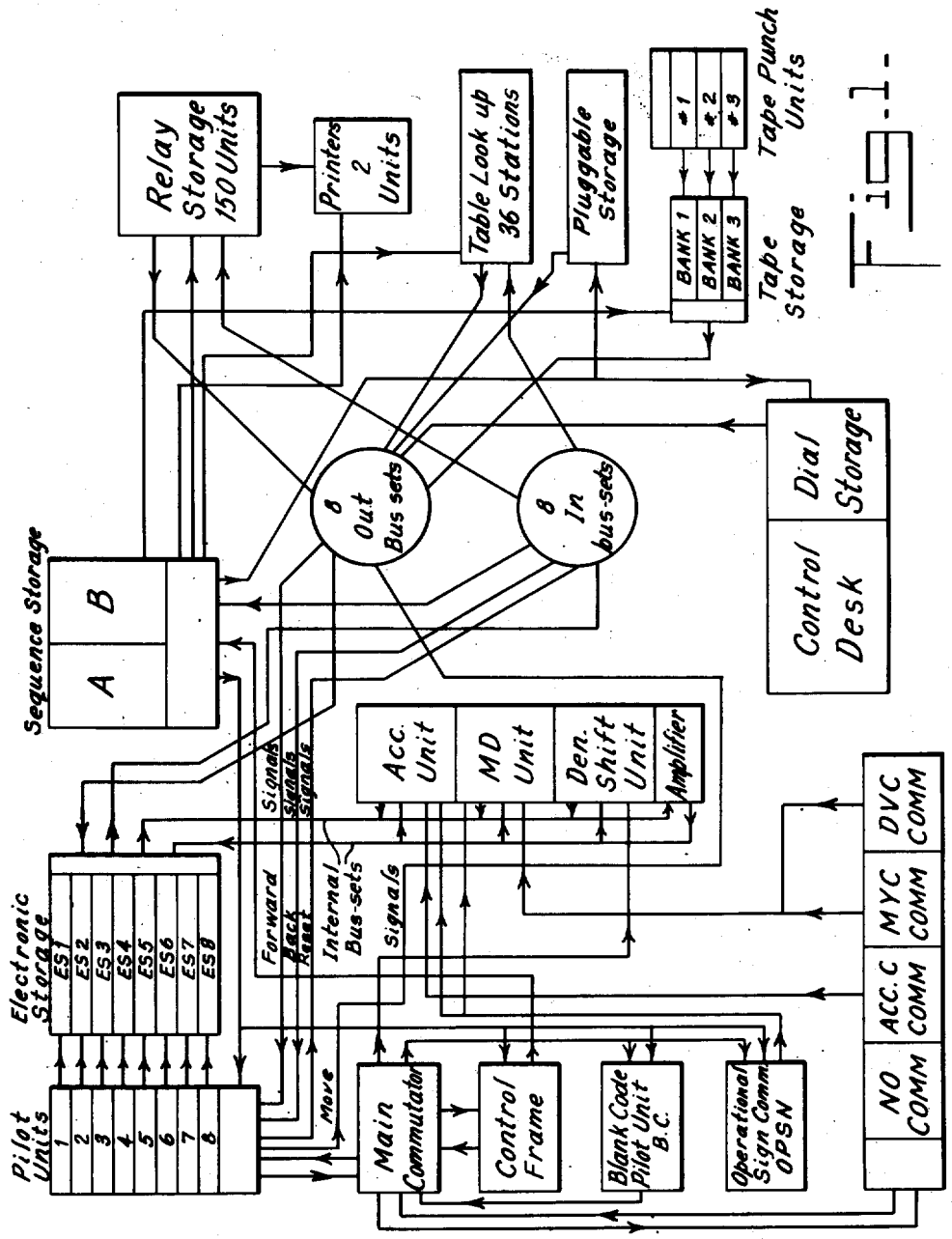

INVENTORS
F.E. HAMILTON
R.R. SEEBER, Jr.
R.A. ROWLEY,
E.S. HUGHES, Jr.

BY J. J. Robins
ATTORNEY