United States Patent [19]

Gombrich et al.

[11] **Patent Number: 4,835,372**

[45] **Date of Patent: May 30, 1989**

[54] **PATIENT CARE SYSTEM**

[75] Inventors: **Peter P. Gombrich,** Boulder; **Richard J. Beard,** Longmont; **Richard A. Griffee,** Golden; **Thomas R. Wilson; Ronald E. Zook,** both of Boulder, all of Colo.; **Max S. Hendrickson,** Forest Lake, Minn.

[73] Assignee: **ClinCom Incorporated,** Boulder, Colo.

[21] Appl. No.: **78,195**

[22] Filed: **Jul. 24, 1987**

Related U.S. Application Data

[63] Continuation-in-part of Ser. No. 862,278, May 12, 1986, abandoned, which is a continuation-in-part of Ser. No. 757,277, Jul. 19, 1985, abandoned.

[51] **Int. Cl.**[4] **G06E 15/20**

[52] **U.S. Cl.** **235/375;** 235/462; 235/472; 379/93

[58] **Field of Search** 235/375, 462, 472; 379/93

[56] **References Cited**

U.S. PATENT DOCUMENTS

3,439,320 4/1969 Ward .
3,685,723 8/1972 Berler .
3,715,570 2/1973 Weichselbaum et al. .
3,803,571 4/1974 Luz .
3,826,900 7/1974 Moellering .
3,831,006 8/1974 Chaffin, III et al. .
3,848,112 11/1974 Weichselbaum et al. .
3,891,980 6/1975 Lewis et al. .
3,898,619 8/1975 Carsten et al. .
4,006,397 2/1977 Catotti et al. .
4,121,574 10/1978 Lester .
4,180,204 12/1979 Koenig et al. .
4,209,787 6/1980 Freeny, Jr. .
4,227,258 10/1980 Root et al. .
4,274,083 6/1981 Tomoeda .
4,303,910 12/1981 McCann .
4,337,462 6/1982 Lemelson .
4,359,631 11/1982 Lockwood et al. .
4,445,028 4/1984 Huber .
4,471,165 9/1984 De Fino et al. .
4,471,345 9/1984 Barrett, Jr. .
4,473,884 9/1984 Behl .
4,476,381 10/1984 Rubin .
4,481,382 11/1984 Villa-Rene .
4,483,683 11/1984 Alley, Jr. .
4,486,624 12/1984 Puhl et al. .
4,488,035 12/1984 Withnall et al. .
4,489,313 12/1984 Pfister .
4,491,725 1/1985 Pritchard .

(List continued on next page.)

OTHER PUBLICATIONS

Potential Use of Bar Codes to Implement Automated Dispensing Quality Assurance Programs, Hospital Pharmacy, vol. 20, May 1985, by Hokanson et al.

Bar Coding for Medical Device Labeling, *MD&DI,* Aug. 1983, by Richard Farb.

(List continued on next page.)

Primary Examiner—David L. Trafton

Attorney, Agent, or Firm—Merchant, Gould, Smith, Edell, Welter & Schmidt

[57] **ABSTRACT**

A patient identification system for relating items with patients and ensuring that an identified item corresponds to an identified patient. The patient identification system includes a computer system (**42**) interconnected to a plurality of remote terminals (**62**) by conventional telephone wiring (**66, 70**). The patient identification system further including a portable bar code reading device (**48**) including a bar code wand (**120**), an LCD display (**116**) and a key pad (**114**). The portable bar code reading device (**48**) communicates via RF transmission with an RF/PLC modem (**60**). The bar code reading device (**48**) is utilized to read a patient's unique bar code (**50**) on a patient's identification bracelet (**52**), bar codes (**51**) on labels (**53**) attached to various items in the hospital relating the item to a specific patient and bar codes (**49**) on item labels (**47**) whereby such items can be automatically correlated to a specific patient and checks performed at the computer system (**42**) to ensure that the item properly corresponds to the identified patient.
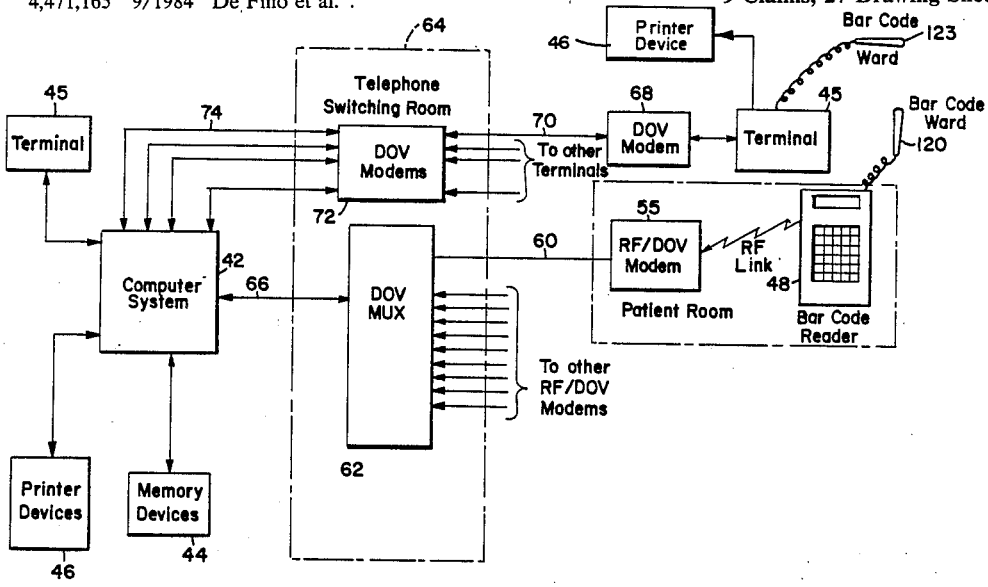
9 Claims, 27 Drawing Sheets