US009232672B2

(12) **United States Patent**
Kwong et al.

(10) **Patent No.: US 9,232,672 B2**
(45) **Date of Patent: Jan. 5, 2016**

(54) **CERAMIC INSERT CONTROL MECHANISM**

(71) Applicant: **Apple Inc.**, Cupertino, CA (US)

(72) Inventors: **Kelvin Kwong**, San Jose, CA (US); **Benjamin J. Pope**, Sunnyvale, CA (US); **Nicholas G. Merz**, San Francisco, CA (US)

(73) Assignee: **Apple Inc.**, Cupertino, CA (US)

(*) Notice: Subject to any disclaimer, the term of this patent is extended or adjusted under 35 U.S.C. 154(b) by 266 days.

(21) Appl. No.: **13/738,107**

(22) Filed: **Jan. 10, 2013**

(65) **Prior Publication Data**

US 2014/0192459 A1 Jul. 10, 2014

(51) **Int. Cl.**
H01H 9/00 (2006.01)
H05K 5/03 (2006.01)
(Continued)

(52) **U.S. Cl.**
CPC ***H05K 5/03*** (2013.01); ***G06F 1/1626*** (2013.01); ***G06F 3/02*** (2013.01); ***G06F 3/0202*** (2013.01);
(Continued)

(58) **Field of Classification Search**
CPC H01H 9/00; H01H 5/00; H01H 1/00; H01H 1/02; H01H 1/10; H01H 3/00; H01H 13/00; H01H 3/02; H01H 3/04; H01H 3/06; H01H 3/12; H01H 9/02; H01H 13/04; H01H 13/70; H01H 21/00; H01H 21/04; H01H 21/06; H01H 23/00; H01H 23/02; H01H 23/04; H01H 23/14; H01H 23/24; H01H 23/28; H01H 23/26; H01H 25/00; H01H 2003/00; H01H 2221/00; H01H 2221/012; H01H 2221/016; H01H 2223/00; H01H 2223/01; H01H 2223/012; H01H 2223/034; H01H 2223/0345; H01H 2223/056; H01H 2231/016; H01H 2231/026; H01H 2233/04; H01H 2231/052; H01H 2233/03; H01H 2233/05; H01H 2233/07; H01H 2239/05; H01H 2300/00
USPC 200/314, 402, 468, 502, 511–514, 238, 200/329, 341, 293; 345/173
See application file for complete search history.

(56) **References Cited**

U.S. PATENT DOCUMENTS

2,248,955 A 7/1941 Capps
2,854,794 A 10/1958 Luedeman
(Continued)

FOREIGN PATENT DOCUMENTS

DE 202008002512 U1 6/2008
EP 0305626 3/1989
(Continued)

OTHER PUBLICATIONS

Schmid et al., "Effect of Crystal Orientation and Temperature on the Strength of Sapphire," J.Am.Ceram.Soc., 81, 1998, pp. 885-893.
(Continued)

Primary Examiner — Edwin A. Leon
Assistant Examiner — Anthony R. Jimenez
(74) *Attorney, Agent, or Firm* — Brownstein Hyatt Farber Schreck, LLP

(57) **ABSTRACT**

A control mechanism for an electronic device comprises a cover glass having an aperture defined therein. The aperture extends from an interior to an exterior of the device. A control member is positioned within the aperture, coupled to an actuator. The control member comprises a ceramic insert having a contact surface exposed to the exterior of the housing, operable to actuate the actuator in response to a force on the contact surface. A bearing member is molded about the insert. The bearing member has a hardness less than that of the ceramic insert, and less than that of the cover glass.
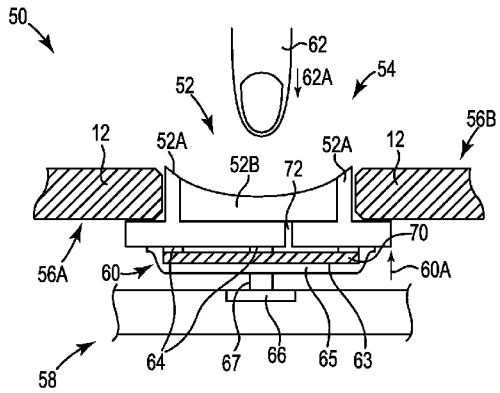
20 Claims, 7 Drawing Sheets