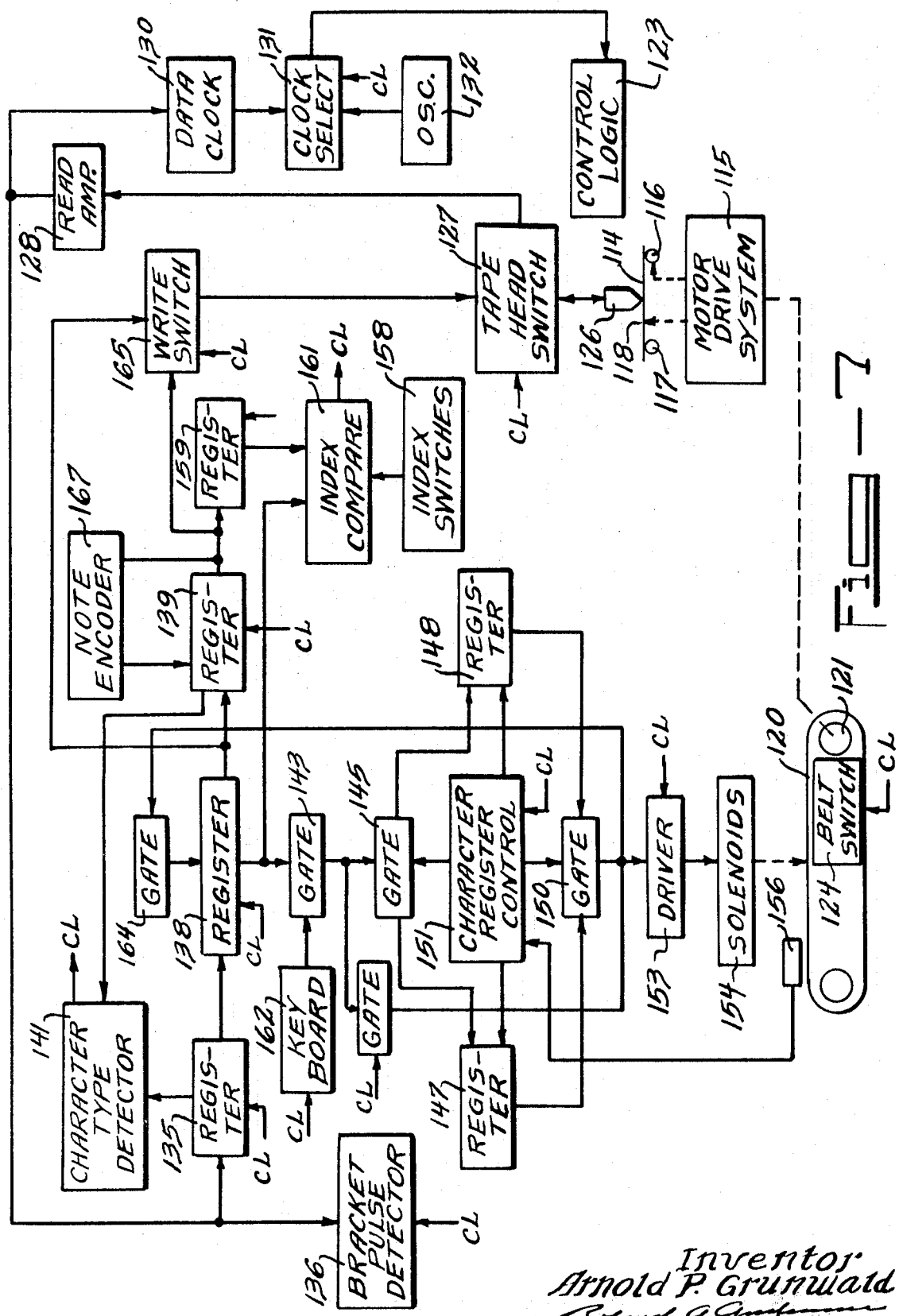

FIG. 7

Inventor:
Arnold P. Grunwald
Attorney