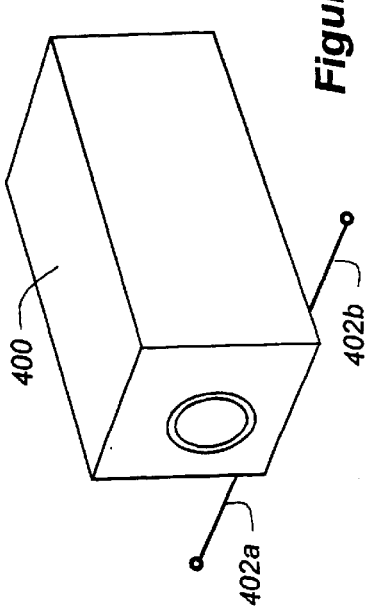

Figure - 4A

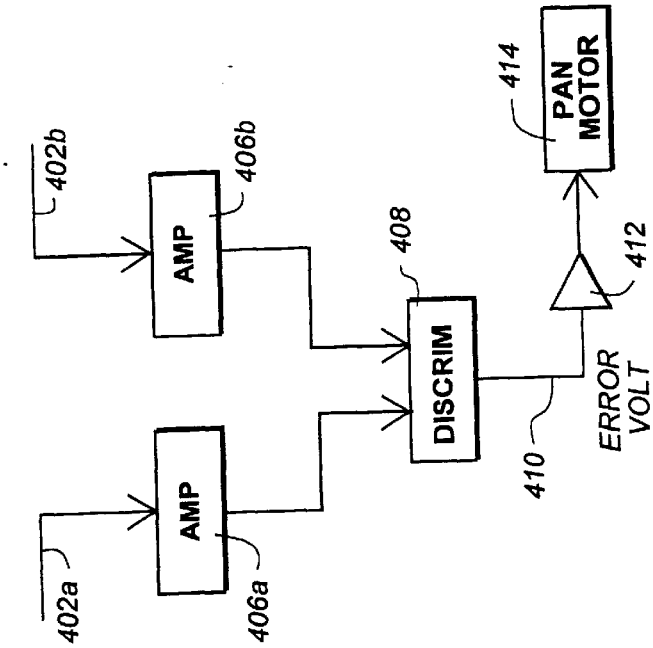

Figure - 4B

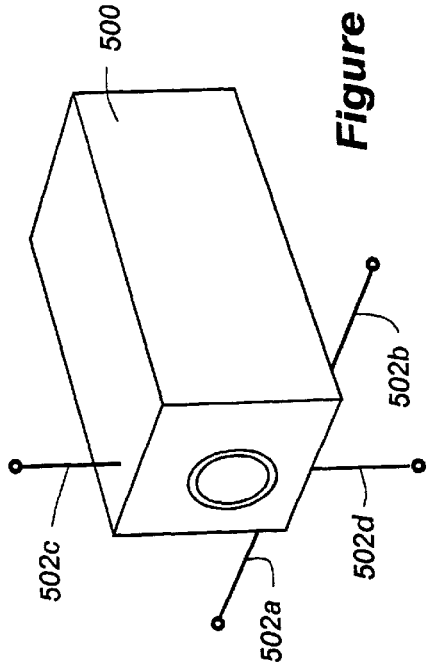

Figure - 5