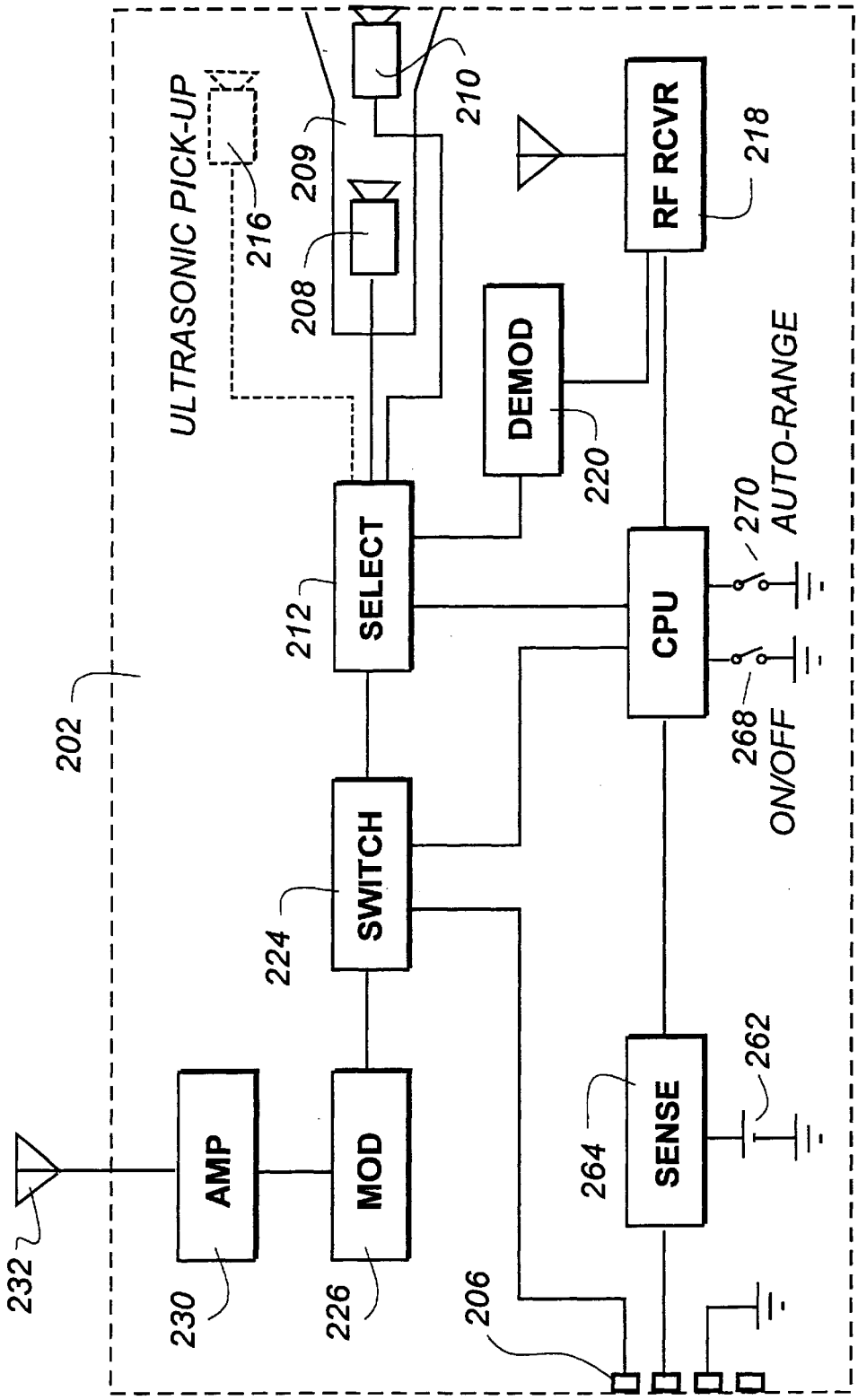
ULTRASONIC PICK-UP
216
209
210
208
RF RCVR
218
DEMOD
220
AUTO-RANGE
270
SELECT
212
CPU
202
268
ON/OFF
SWITCH
224
262
SENSE
264
AMP
MOD
232
230
226
206

Figure - 2A