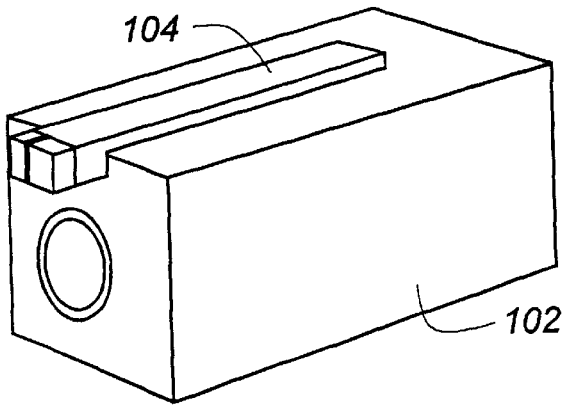

Figure - 1A

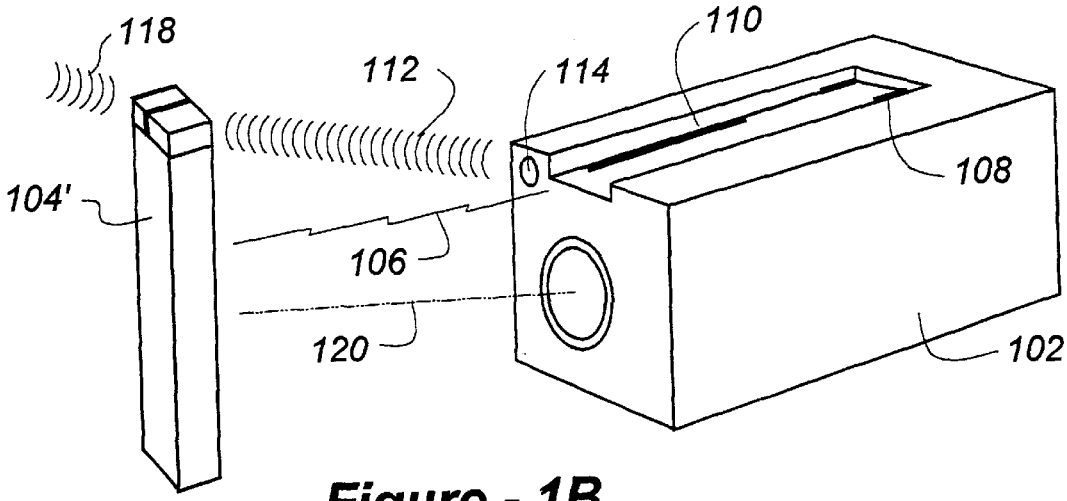

Figure - 1B