US007317872B1

(12) **United States Patent**
Posa et al.

(10) **Patent No.: US 7,317,872 B1**
(45) **Date of Patent: Jan. 8, 2008**

(54) **REMOTE MICROPHONE AND RANGE-FINDING CONFIGURATION**

(76) Inventors: **John G. Posa**, 1204 Harbrooke, Ann Arbor, MI (US) 48103; **Barry H. Schwab**, 5298 Cedarhurst Dr., West Bloomfield, MI (US) 48322

(*) Notice: Subject to any disclaimer, the term of this patent is extended or adjusted under 35 U.S.C. 154(b) by 0 days.

(21) Appl. No.: **09/431,510**

(22) Filed: **Nov. 1, 1999**

Related U.S. Application Data

(63) Continuation of application No. 08/949,070, filed on Oct. 10, 1997, now Pat. No. 5,995,763.

(51) **Int. Cl.**
G03B 13/36 (2006.01)
G01S 15/00 (2006.01)

(52) **U.S. Cl.** **396/57**; 396/105; 367/99; 367/107

(58) **Field of Classification Search** 396/56–59, 396/105, 312; 348/211, 214, 163, 169, 348; 352/140, 34, 1; 367/99, 107
See application file for complete search history.

(56) **References Cited**

U.S. PATENT DOCUMENTS

4,239,356	A	12/1980	Freudenschuss et al.	354/23
4,290,685	A	9/1981	Ban	354/266
4,534,629	A	8/1985	Bogle et al.	352/140
4,550,343	A	10/1985	Nakatani	358/229
4,601,557	A	7/1986	Bogle et al.	352/140
4,636,052	A	1/1987	Bowsher	354/410
4,816,855	A	3/1989	Kitaura et al.	354/415
4,831,438	A	5/1989	Bellman, Jr. et al.	358/108
4,884,094	A	11/1989	Kitaura et al.	354/412
4,918,476	A	4/1990	Tejima	354/221
4,928,179	A	5/1990	Takahashi et al.	358/210
4,980,871	A	12/1990	Sieber et al.	367/127
5,012,335	A	4/1991	Cohodar	358/108
5,038,162	A	8/1991	Tejima	354/221
5,076,686	A	12/1991	Preston	352/140
5,092,670	A	3/1992	Preston	352/140
5,159,375	A	10/1992	Taniguchi et al.	354/400
5,172,155	A	12/1992	Kosaka	354/403
5,179,421	A	1/1993	Parker et al.	356/152
5,206,721	A	4/1993	Ashida et al.	358/85
5,231,483	A	7/1993	Sieber et al.	358/125
5,268,734	A	12/1993	Parker et al.	356/152
5,283,610	A	2/1994	Sasaki	396/57
5,361,115	A	11/1994	Ohtsuka et al.	354/400
5,384,594	A	1/1995	Sieber et al.	348/169
5,387,955	A	2/1995	Cocca	396/56
5,432,597	A	7/1995	Parker et al.	356/139.06
5,471,296	A	11/1995	Parker et al.	356/139.06
5,512,941	A	4/1996	Takahashi et al.	348/81
5,570,177	A	10/1996	Parker et al.	356/139.06
5,572,317	A	11/1996	Parker et al.	356/139.06
5,594,498	A	1/1997	Fraley	348/158

OTHER PUBLICATIONS

ParkerVision, Inc. "CameraMan" Brochure, *The Ultimate Videomaking System*.

Primary Examiner—W. B. Perkey
(74) *Attorney, Agent, or Firm*—Giffford, Krass, Groh, Sprinkle, Anderson & Citkowski, PC

(57) **ABSTRACT**

Remotely operable electronic apparatus are applied to distance measurement and picture/sound recording wherein, for example, a remote unit may be equipped with a microphone and an active range finder coupled to an auto-focussing capability. In one embodiment a camera is adapted to transmit a signal to the remote unit which returns a signal enabling the camera to accurately calculate distance and adjust focus in accordance with time-of-flight. The transponder preferably forms part of a wireless microphone, with the signal transmitted by the camera being preferably acoustical in nature. The acoustical signal transmitted by the camera is preferably modulated onto a return RF signal, enabling at least a portion of the audio circuitry associated with voice modulation to be used for the purpose of modulating the ranging signal, thereby realizing a very efficient and economical approach to remote sound detection and active ranging finding.
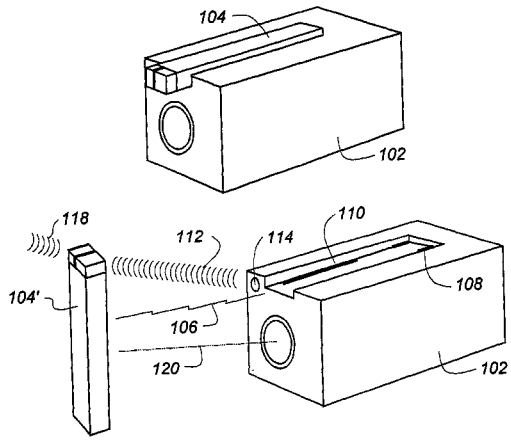
15 Claims, 5 Drawing Sheets