Dec. 1, 1959 G. W. GOODRICH 2,914,872

MODULAR DISPLAY ARRANGEMENT

Filed Aug. 27, 1957 4 Sheets-Sheet 4

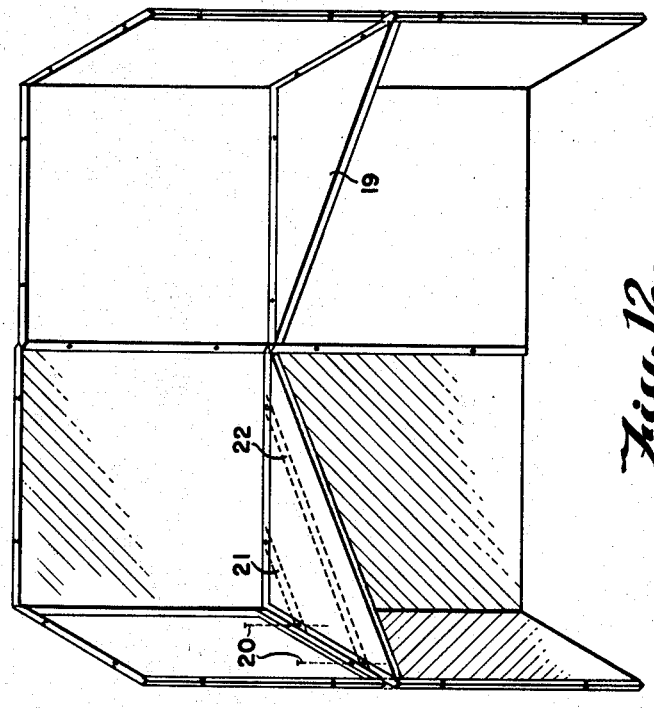


Fig. 12.

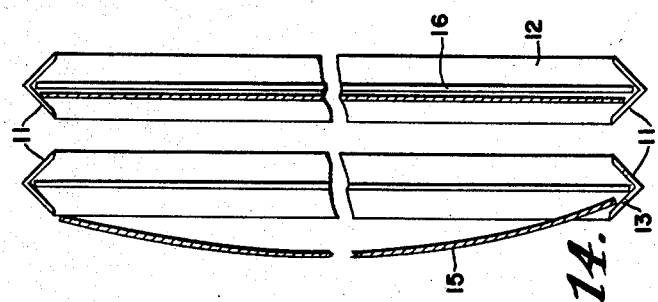


Fig. 14.

Fig. 15.

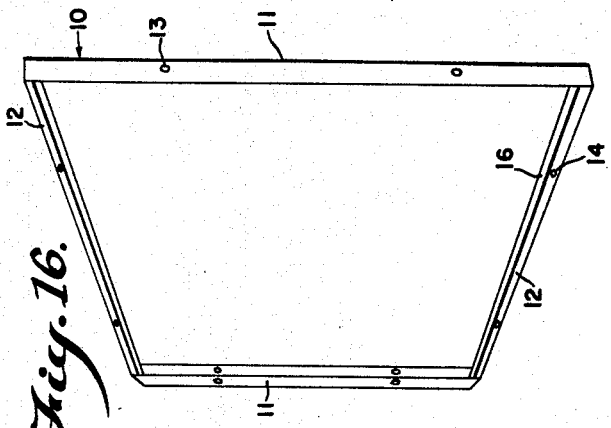


Fig. 16.

INVENTOR.
GORDON W. GOODRICH
BY
Julian C. Rafro
ATTORNEY