US009411272B2

(12) **United States Patent**
Matsubara et al.

(10) **Patent No.: US 9,411,272 B2**
(45) **Date of Patent: Aug. 9, 2016**

(54) **HEATING DEVICE, FIXING DEVICE, AND IMAGE FORMING APPARATUS**

(71) Applicant: **FUJI XEROX CO., LTD.**, Tokyo (JP)

(72) Inventors: **Takashi Matsubara**, Kanagawa (JP); **Tetsuro Kodera**, Kanagawa (JP)

(73) Assignee: **FUJI XEROX CO., LTD.**, Tokyo (JP)

(*) Notice: Subject to any disclaimer, the term of this patent is extended or adjusted under 35 U.S.C. 154(b) by 0 days.

(21) Appl. No.: **14/613,478**

(22) Filed: **Feb. 4, 2015**

(65) **Prior Publication Data**

US 2016/0026122 A1 Jan. 28, 2016

(30) **Foreign Application Priority Data**

Jul. 25, 2014 (JP) 2014-152311

(51) **Int. Cl.**
G03G 15/20 (2006.01)

(52) **U.S. Cl.**
CPC ***G03G 15/2007*** (2013.01); ***G03G 15/2053*** (2013.01); *G03G 2215/2035* (2013.01)

(58) **Field of Classification Search**
CPC G03G 15/2007; G03G 15/2064; G03G 12/2053; G03G 2215/20
See application file for complete search history.

(56) **References Cited**

U.S. PATENT DOCUMENTS

4,121,888 A 10/1978 Tomura et al.
4,435,069 A * 3/1984 Sato G03G 15/2053 219/216
2011/0044740 A1 2/2011 Matsubara et al.

FOREIGN PATENT DOCUMENTS

JP 53-3241 A 1/1978
JP 2011-043609 A 3/2011

* cited by examiner

Primary Examiner — Erika J Villaluna
(74) *Attorney, Agent, or Firm* — Sughrue Mion, PLLC

(57) **ABSTRACT**

Provided is a heating device including a transparent endless pressurizing member that pressurizes a heating target, a contact member that transmits light which is emitted from a light source to heat the heating target, and comes in contact with an inner circumferential surface of the pressurizing member, a support member that supports the contact member within the pressurizing member, and a reflection section that is provided between the contact member and the support member, and reflects light toward a side opposite to the support member.
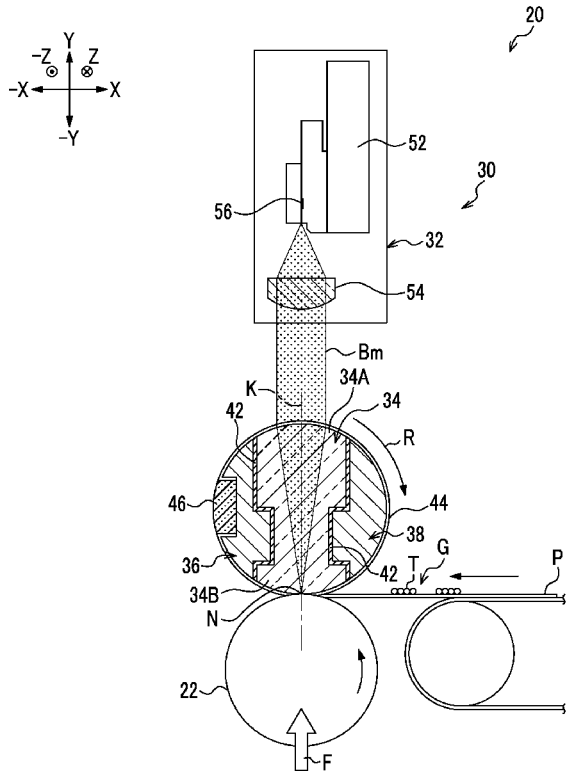
11 Claims, 11 Drawing Sheets