FIG. 1

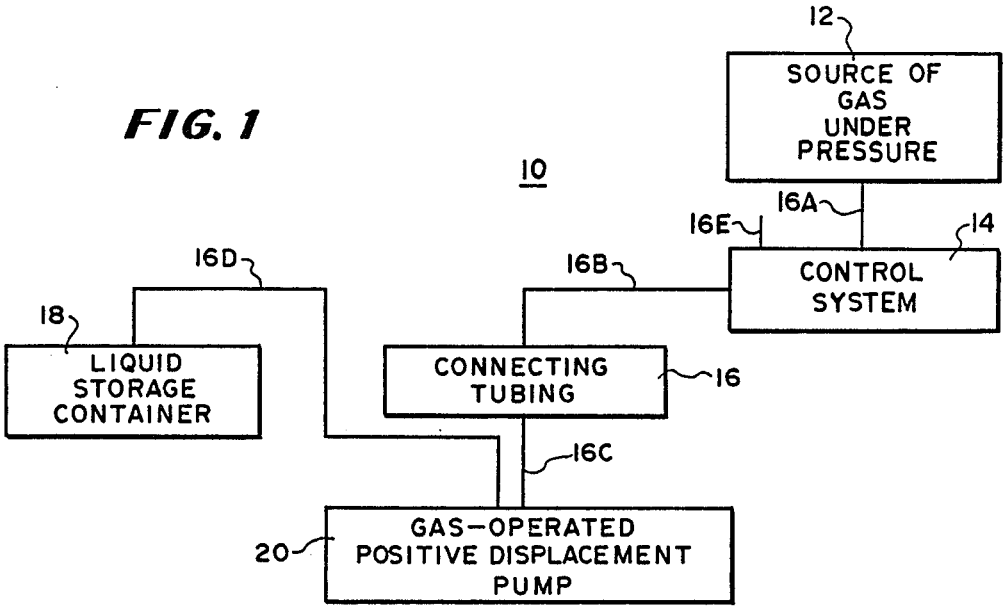
12
SOURCE OF GAS UNDER PRESSURE
10
16A
16E
14
CONTROL SYSTEM
16D
16B
18
LIQUID STORAGE CONTAINER
CONNECTING TUBING
16
16C
20
GAS-OPERATED POSITIVE DISPLACEMENT PUMP

FIG. 2

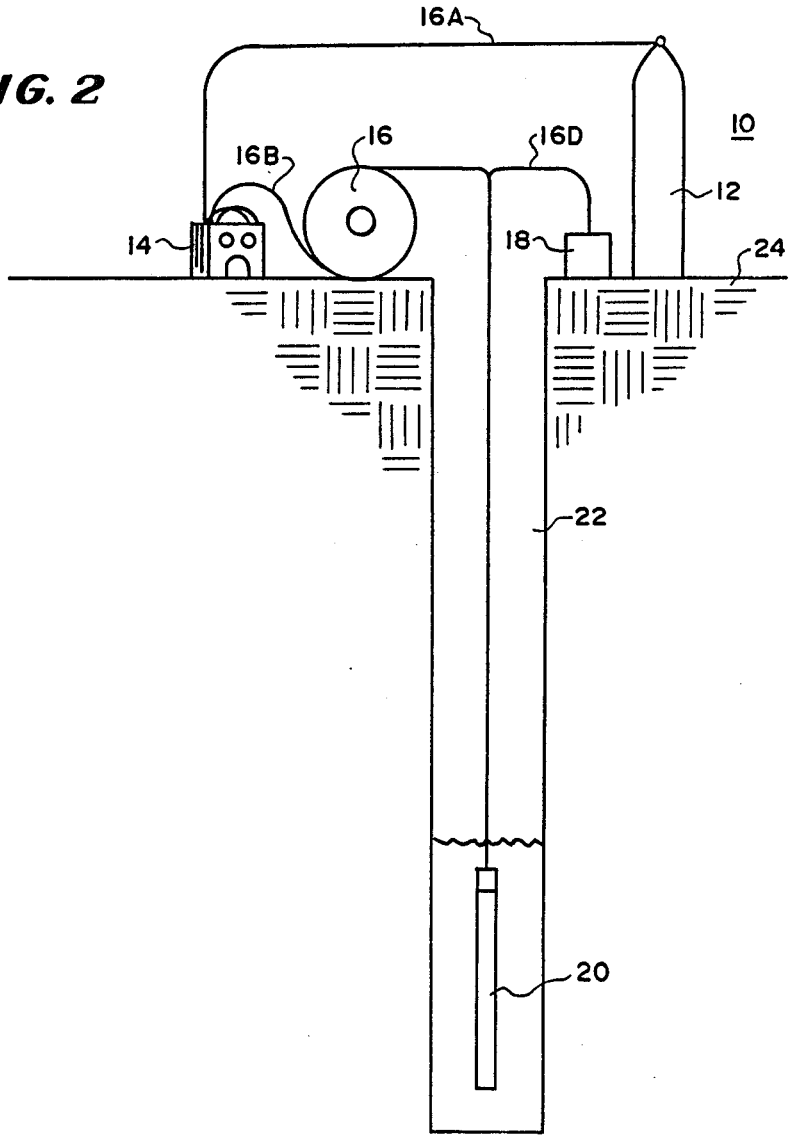
16A
10
16B
16
16D
12
14
18
24
22
20