US009409672B2

(12) **United States Patent**
**Kullberg**

(10) **Patent No.: US 9,409,672 B2**
(45) **Date of Patent: Aug. 9, 2016**

(54) **CLOSURE ON A RECTANGULAR CONTAINER**

(76) Inventor: **Wilhelm Kullberg**, Wood Dale, IL (US)

( * ) Notice: Subject to any disclaimer, the term of this patent is extended or adjusted under 35 U.S.C. 154(b) by 465 days.

(21) Appl. No.: **13/573,160**

(22) Filed: **Aug. 24, 2012**

(65) **Prior Publication Data**

US 2013/0098978 A1 Apr. 25, 2013

(51) **Int. Cl.**
***B65D 5/06*** (2006.01)
***B65D 5/74*** (2006.01)

(52) **U.S. Cl.**
CPC ..... ***B65D 5/742*** (2013.01); ***B65D 5/062*** (2013.01); ***B65D 5/741*** (2013.01)

(58) **Field of Classification Search**
CPC ..... B65D 5/062; B65D 5/741; B65D 5/742
USPC ..... 229/125.42, 137, 208, 212, 217, 219, 229/245
See application file for complete search history.

(56) **References Cited**

U.S. PATENT DOCUMENTS

2,300,703 A * 11/1942 Carlo ..... 229/217
2,364,364 A * 12/1944 Hultin ..... 229/219
2,695,745 A * 11/1954 Dixon ..... 229/249
2,861,732 A * 11/1958 Parker ..... 229/217
2,928,579 A * 3/1960 Graybill ..... 229/217
3,003,673 A * 10/1961 Clark et al. ..... 229/217
3,059,826 A * 10/1962 Harms ..... 229/217
3,081,927 A * 3/1963 Hayhurst ..... 229/125.37
3,107,038 A * 10/1963 Kuchenbecker ..... 229/217
3,118,586 A * 1/1964 Kelly ..... 229/137
3,147,904 A * 9/1964 Larson ..... 229/137
3,341,349 A * 9/1967 Feeney et al. ..... 229/137
3,724,741 A * 4/1973 Jacobson ..... 229/208
3,892,347 A * 7/1975 Egleston ..... 229/217
4,180,167 A * 12/1979 Leavitt et al. ..... 229/218
4,657,143 A * 4/1987 Forbes, Jr. ..... 229/212
5,080,233 A * 1/1992 Wyberg ..... 229/208
5,335,847 A * 8/1994 Lisiecki ..... 229/137
5,685,479 A * 11/1997 Weber-Caspers ..... 229/125.42
6,158,654 A * 12/2000 Zimmermann ..... 229/217
6,318,626 B1 * 11/2001 St. Pierre et al. ..... 229/117.3
2005/0274782 A1 * 12/2005 Petrelli et al. ..... 229/217

FOREIGN PATENT DOCUMENTS

EP 820936 A3 * 1/1998 ..... B65D 5/742

* cited by examiner

*Primary Examiner* — Gary Elkins
(74) *Attorney, Agent, or Firm* — Bishop Diehl & Lee, Ltd.

(57) **ABSTRACT**

A closure on a rectangular container with a square or rectangular cross section with the closure easily opened into a pour spout. The container closure can be resealed. The new container provides a consumer friendly container design, reduced materials consumption, high efficiency from production capacity and distribution view points.
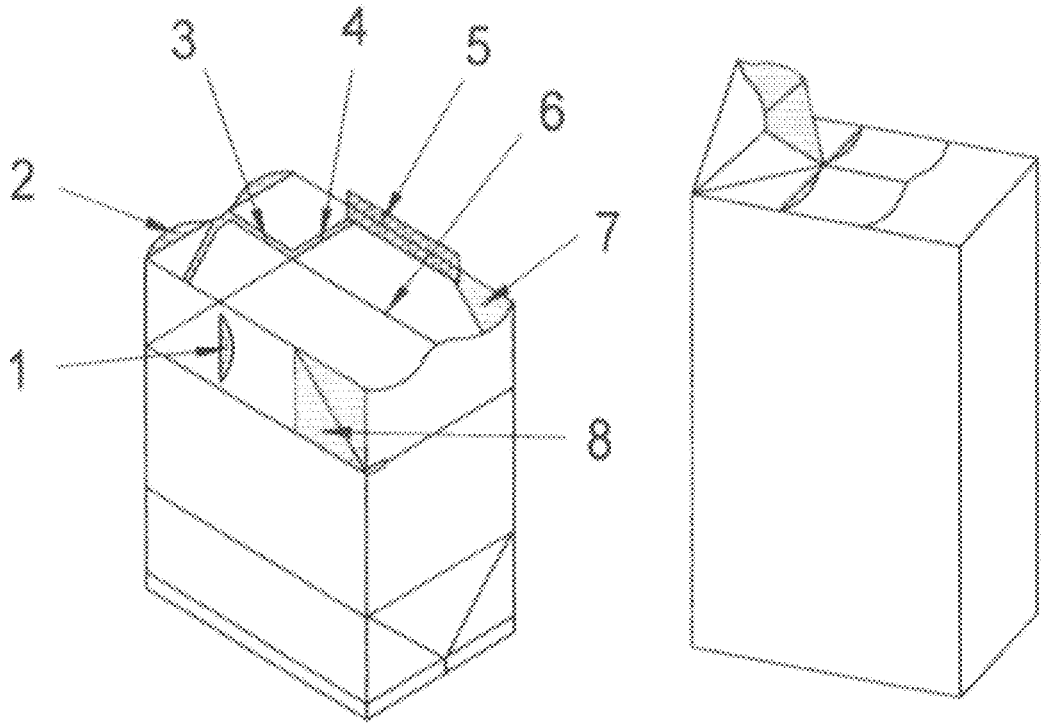
**3 Claims, 1 Drawing Sheet**