US009409372B2

(12) **United States Patent**
Hada et al.

(10) **Patent No.: US 9,409,372 B2**
(45) **Date of Patent: Aug. 9, 2016**

(54) **METHOD FOR PERFORATING TISSUE SHEETS**

(75) Inventors: **Frank Stephen Hada**, Appleton, WI (US); **James Leo Baggot**, Menasha, WI (US); **Robert Eugene Krautkramer**, Combined Locks, WI (US)

(73) Assignee: **KIMBERLY-CLARK WORLDWIDE, INC.**, Neenah, WI (US)

(*) Notice: Subject to any disclaimer, the term of this patent is extended or adjusted under 35 U.S.C. 154(b) by 1317 days.

(21) Appl. No.: **12/345,174**

(22) Filed: **Dec. 29, 2008**

(65) **Prior Publication Data**

US 2010/0167896 A1 Jul. 1, 2010

(51) **Int. Cl.**

B31D 1/04	(2006.01)
B26D 7/20	(2006.01)
B26F 1/20	(2006.01)

(52) **U.S. Cl.**

CPC .. ***B31D 1/04*** (2013.01); ***B26D 7/20*** (2013.01); ***B26F 1/20*** (2013.01); *B26D 2007/202* (2013.01); *B31F 2201/0797* (2013.01)

(58) **Field of Classification Search**

USPC 493/365, 363, 364, 366, 340, 370, 371

See application file for complete search history.

(56) **References Cited**

U.S. PATENT DOCUMENTS

3,496,260	A	*	2/1970	Guenther et al.	264/156
3,550,826	A	*	12/1970	Salmela	225/3
3,683,559	A	*	8/1972	Kalwaites	451/188
3,719,736	A	*	3/1973	Woodruff	264/156
3,845,682	A	*	11/1974	Willhite et al.	83/431
3,855,046	A	*	12/1974	Hansen et al.	428/198
3,859,879	A	*	1/1975	Spengler	83/155
4,133,088	A	*	1/1979	Hikobe et al.	28/279
4,319,868	A	*	3/1982	Riemersma et al.	425/290
4,486,377	A	*	12/1984	Lucchesi et al.	264/510
4,487,377	A	*	12/1984	Perini	242/521
4,640,165	A	*	2/1987	McMahon et al.	83/346
4,687,153	A	*	8/1987	McNeil	242/521
4,691,908	A	*	9/1987	Bradley	270/21.1
5,137,225	A		8/1992	Biagiotti	
5,151,077	A	*	9/1992	Cole et al.	493/353
5,230,268	A	*	7/1993	Richter	83/303
5,248,106	A		9/1993	Biagiotti	
5,538,199	A		7/1996	Biagiotti	
5,542,622	A		8/1996	Biagiotti	
5,836,228	A	*	11/1998	Guthrie et al.	83/342
5,839,688	A	*	11/1998	Hertel et al.	242/523.1
5,919,177	A	*	7/1999	Georger et al.	604/367
6,007,468	A	*	12/1999	Giacometti	493/341
6,009,781	A	*	1/2000	McNeil	83/37
6,296,601	B1	*	10/2001	Couturier	493/365

(Continued)

FOREIGN PATENT DOCUMENTS

JP	06-298414	A	10/1994
KR	10-1991-0018294	A	11/1991
KR	10-1993-0011434	B1	12/1993
KR	10-0163450	B1	12/1998

Primary Examiner — Christopher Harmon

(74) *Attorney, Agent, or Firm* — Kimberly-Clark Worldwide, Inc.

(57) **ABSTRACT**

Curvilinear or other complex perforation patterns for paper products, such as paper towels and bath tissue, can be produced using a differential speed perforation nip formed between a rotating pattern roll and a moving anvil surface. The relative speed between the perforation elements on the surface of the pattern roll and the anvil surface shears the web at the perforation points.
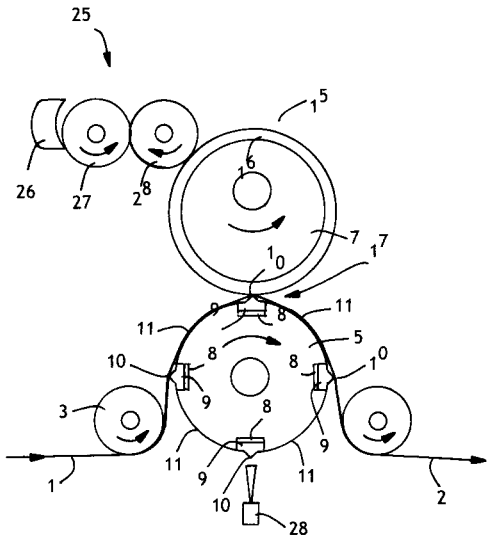
17 Claims, 2 Drawing Sheets